Installation Instructions

Webasto Rack System
BlueCool V-PRO Series

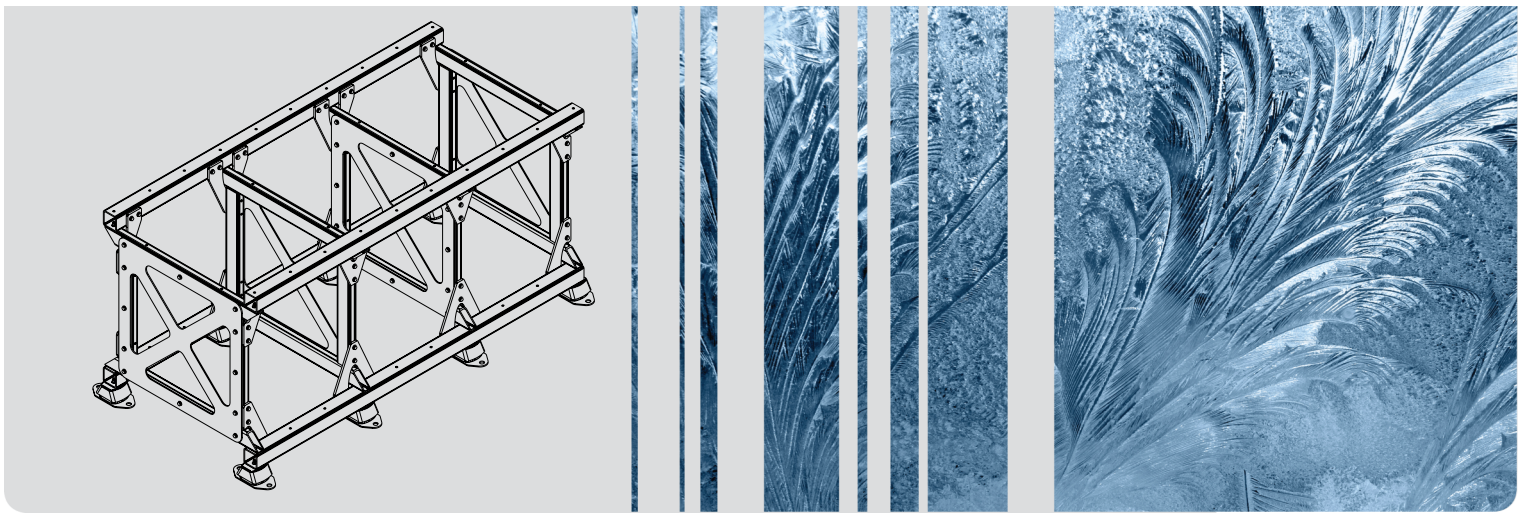

English

This document is valid for:

2510525A Set Rack 2xV-PRO 2-1 in row - Steel
2510526A Set Rack 3xV-PRO 3-1 in row - Steel
2510527A Set Rack 2xV-PRO 1-2 on top - Steel
2510528A Set Rack 4xV-PRO 2-2 on top - Steel
2510529A Set Rack 6xV-PRO 3-2 on top - Steel

Table of Contents

1 About this document 3
1.1 Purpose of this document 3
1.2 Using this document 3
1.3 Use of symbols and highlighting 3
1.4 Warranty and liability 3
1.5 Webasto Service App 3

2 Safety 3

3 Scope of delivery 4

4 Tools required 6

5 Rack structure 6
5.1 Bottom level 6
5.2 Top level 7
5.3 Mount the chiller units 8

6 Appendices 8
6.1 Technical drawing 9
6.2 Overview of rack 14

1 About this document

1.1 Purpose of this document

These Installation Instructions (II) are an integral part of the product and contain the information required to ensure correct and safe installation.

1.2 Using this document

Before installing the unit, read the installation instructions and the supplementary information "Important Information on Operating and Installation Instructions".

Technical documentation for BlueCool V-PRO Series is also available at http://dealers.webasto.com

For the operator:

- Operating instructions

For the installer (password-protected):

- Maintenance instructions
- Troubleshooting Guide
- Validation Report

1.3 Use of symbols and highlighting

This document uses warning labels and colours for hazard classification in accordance with ISO 3864:
See also https://www.iso.org/standard/55814.html.

DANGER
This signal word denotes a hazard with a high degree of risk which, if not avoided, will lead to death or serious injury.

WARNING
This signal word denotes a hazard with a moderate degree of risk which, if not avoided, may lead to minor or moderate injury.

CAUTION
This signal word denotes a hazard with a low degree of risk which, if not avoided, will lead to minor or moderate injury.

NOTE
This signal word denotes a Special Technical Feature or (if not observed) potential damage to the product.

Refers to separate documents which are enclosed or can be requested from Webasto.

✓	Requirements for the following necessary action.

1.4 Warranty and liability

Webasto shall not assume liability for defects or damage that are the result of the Installation Instructions / Operating Instructions and the instructions contained therein being disregarded.

This liability exclusion particularly applies to:

- Installation by untrained personnel.
- Improper use.
- Repairs not carried out by a Webasto service workshop.
- Use of non-genuine parts.
- Conversion of the unit without permission from Webasto.

1.5 Webasto Service App

The type label of the V-PRO unit (see Type Label) contains a QR code that can be used to call up further additional technical documentation in various languages. For this purpose, please use the Webasto Service App, which is available as a download for iOS (Apple) and Android (Google). For more information regarding the app, visit:

https://dealers.webasto.com

2 Safety

CAUTION

Sea water enters when installed incorrectly.

Boat can sink; danger of drowning.

When installing the racks with distribution box, suitable measures must be taken to prevent unchecked entry of sea water due to loose distributor parts.

WARNING

Danger of injuries

Suitable fastening means and supports must be selected for the rack and the fixing point must be sufficiently stable.

Both the static load of the rack, including distribution box and water, and the dynamic loads that arise due to the motion of the ship must be safely absorbed.

WARNING

Risk of injury if the unit is dropped or carried incorrectly.

The rack components are heavy and can be incorrectly carried or fall on parts of the body.

3 Scope of delivery

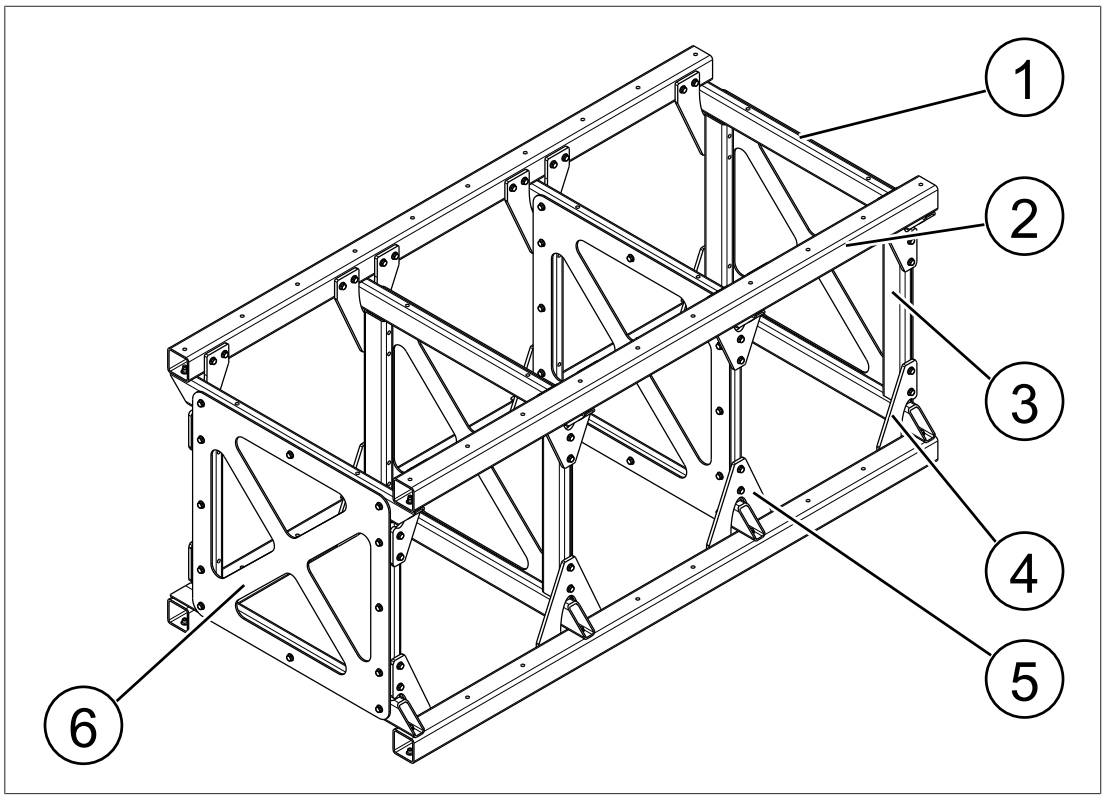

Fig. 1 Scope of delivery Rack

1	Side bar	2	Long bar
3	Support bar	4	Support bracket half
5	Support bracket	6	Cross bracket

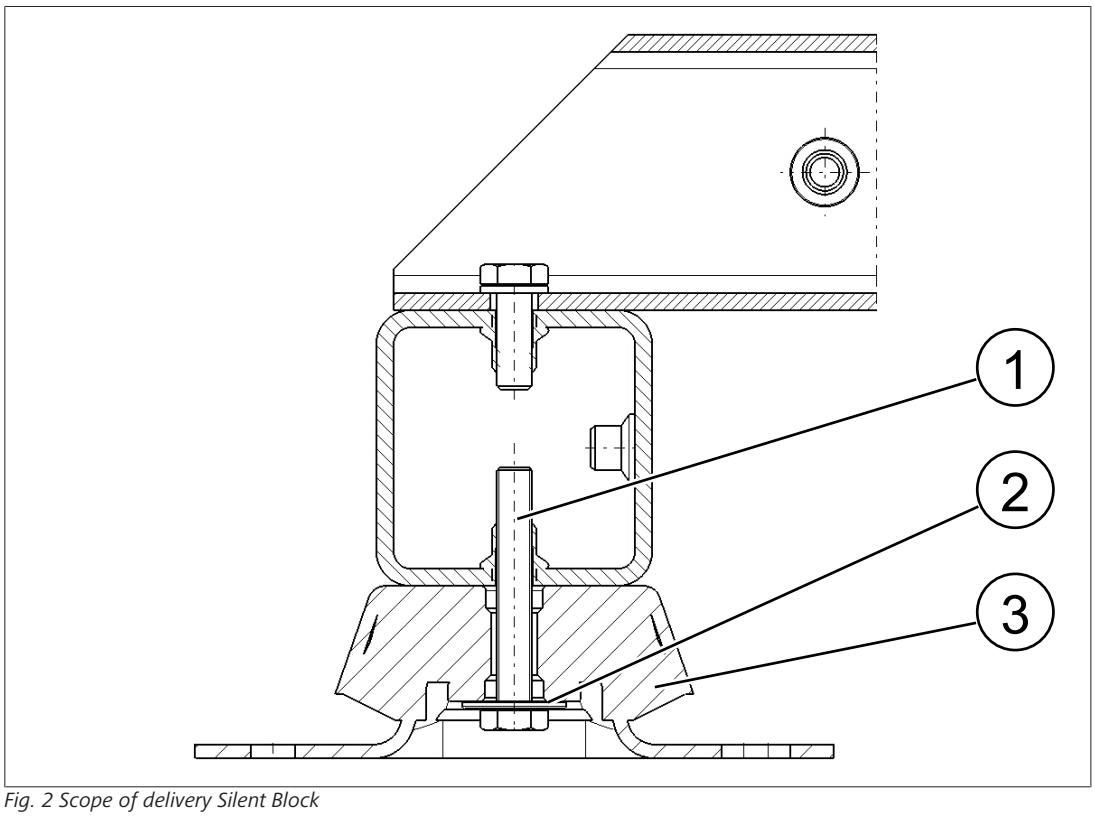

Fig. 2 Scope of delivery Silent Block

1	Screw	2	Washer
3	Silent block		

	Amount of V-PRO units	2	3	2	4	6
	Layout	Side-by-side		On top of one another		
Rack	Part number	2510525A	2510526A	2510527A	2510528A	2510529A
	Part description	Set Rack 2xV-PRO 2-1 in-line	Set Rack 3xV-PRO 3-1 in-line	Set Rack 2xV-PRO 1-2 on top	Set Rack 4xV-PRO 2-2 on top	Set Rack 6xV-PRO 2-2 on top
	Long bar for 1xV-PRO 130-180M	-	-	4	-	-
	Long bar for 1xV-PRO 60-90M	-	-	2	-	-
	Long bar for 2xV-PRO 130-180M	2	-	-	4	-
	Long bar for 2xV-PRO 60-90M	1	-	-	2	-
	Long bar for 3xV-PRO 130-180M	-	2	-	-	4
	Long bar for 3xV-PRO 60-90M	-	1	-	-	2
	Side bar	3	4	4	6	8
	Support bar	-	-	4	6	8
	Cross bracket	-	-	2	3	4
	Support bracket	-	-	-	4	8
	Support bracket half	-	-	8	8	8
	Screws DIN 933 M10 x 30 A2-70	9	12	68	110	152
	Washers DIN 125 – A4 – D10.5	9	12	68	110	152
Silent Block	Silent block SH 45	-	-	4	-	-
	Silent block SH 55	-	-	-	6	8
	Silent block SH 65	6	8	-	-	-
	Screws M10x70	6	8	-	-	-
	Screws M10x90	-	-	4	6	8
	Washers M10 DIN 9021	6	8	4	6	8
Fixing devices for V-PRO unit	Screws DIN 933 M10 x 30 A2-70	8	12	8	16	24
	Washers M10 DIN 9021	8	12	8	16	24
Additional mounting materials	Screws DIN 933 M10 x 30 A2-70	1	3	2	5	3
	Washers DIN 125 – A4 – D10.5	1	3	2	5	3

Table 1: Scope of delivery

4 Tools required

- Lifting gear
- Measuring tape
- Spirit level
- Protractor
- Torque wrench with various fittings
- Liquid screw fixer e.g. LOCTITE 290

5 Rack structure

The Webasto rack system makes it possible to install several V-PRO chillers together to make a system when on board the ship.

You can fully assemble the Webasto rack system and then install the chiller units, or first build the bottom row with chiller units and then the top row.

To ensure sufficient stability even when out at sea, please observe the technical drawings. These contain information about:

- number and position of fixing points,
- components and their arrangement,
- the screws to be used and their tightening torque.

Suitable fasteners must be chosen and the attachment point must be sufficiently stable to mount the Webasto rack system to the attachment pints on the boat.

The attachment point must be able to safely handle the static load of the units as well as the dynamic loads arising due to the motion of the ship.

5.1 Bottom level

Begin with the bottom level.

1. Fasten the supplied silent blocks beneath the long bars. Observe distribution in accordance with Fig. 3.

NOTE

The screws attaching the silent block on the rack have to be secured with threadlocking adhesive, e.g. LOCTITE 290. Access to these is limited after installation of the V-PRO rack system.

2. Fasten the two long bars with mounted silent blocks at the fixing points. The long bars must be arranged in the same plane and must be leveled and be parallel to one another.

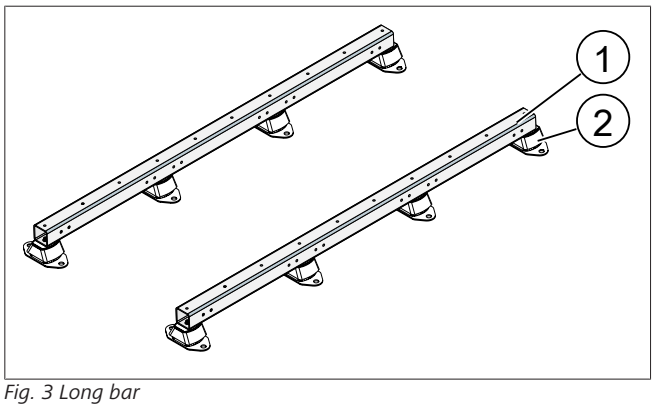

Fig. 3 Long bar

1	Long bar	2	Silentblocks

3. Fasten the side bars on top of the long bars and align these at right angles to the long bars and parallel to one another.

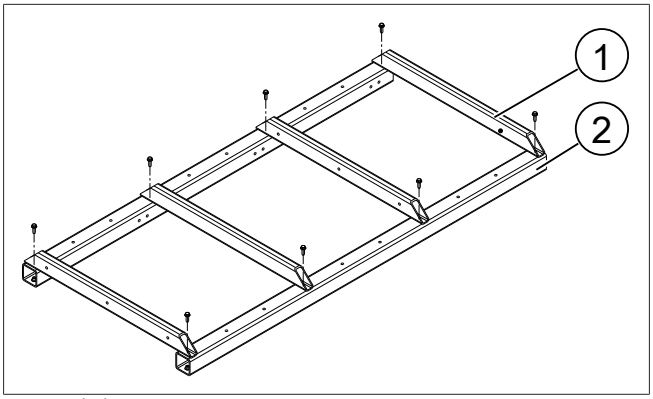

Fig. 4 Side bar

1	Long bar	2	Side bar

4. For a two-level rack, tighten the lower support brackets first.

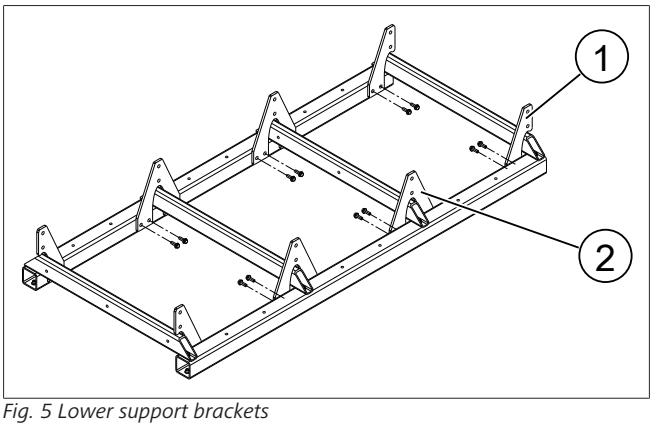

Fig. 5 Lower support brackets

1	Support bracket half	2	Support bracket

NOTE

After step 3, you can install the lower V-PRO chiller units or continue assembling the rack. Both options are possible. The units can also be installed after the rack is finished.

NOTE

For the V-PRO60 M and V-PRO90 M, an additional long bar is fastened to the side bars.

When using the Webasto sea water and cold water distribution sets, the long bar must be mounted on the front side of the rack. The front side of the V-PRO is the side facing away from the hydraulic connections.

The long bar for smaller units can also be used when installing a V-PRO130 M or V-PRO180 M and gives the rack additional rigidity.

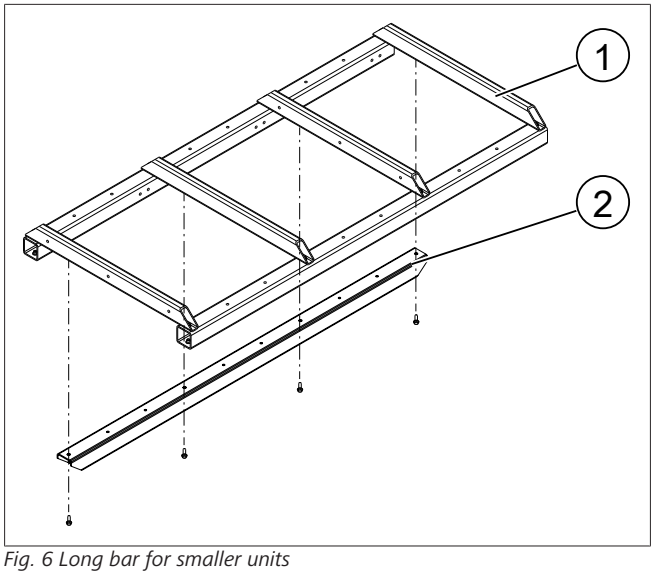

Fig. 6 Long bar for smaller units

1	Side bar	2	Long bar for smaller units

5. Use liquid screw fixer to fix all the screws, to prevent them coming loose due to vibrations.

5.2 Top level

1. Screw the support bars to the support brackets and use the cross brackets to reinforce the construction.

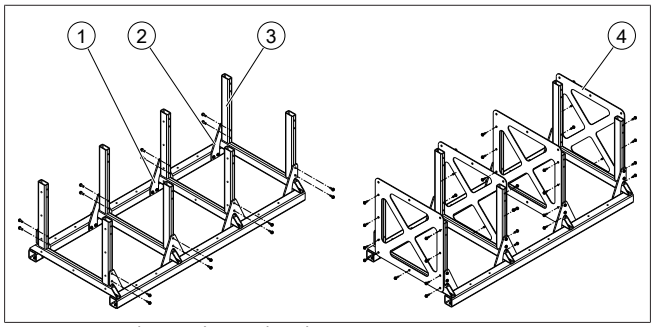

Fig. 7 Support bar and cross bracket

1	Lower support bracket	2	Lower support bracket half
3	Support bar	4	Cross bracket

NOTE
The support bars with the cross brackets must be aligned plumb and perpendicular.

2. Screw the upper side bars to the support bars and the cross brackets.

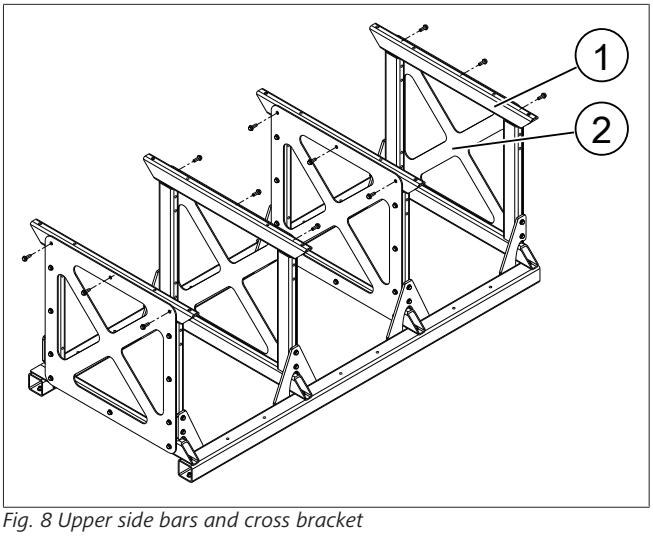

Fig. 8 Upper side bars and cross bracket

1	Upper side bars	2	Cross bracket

3. Screw the upper support brackets to the support bars.

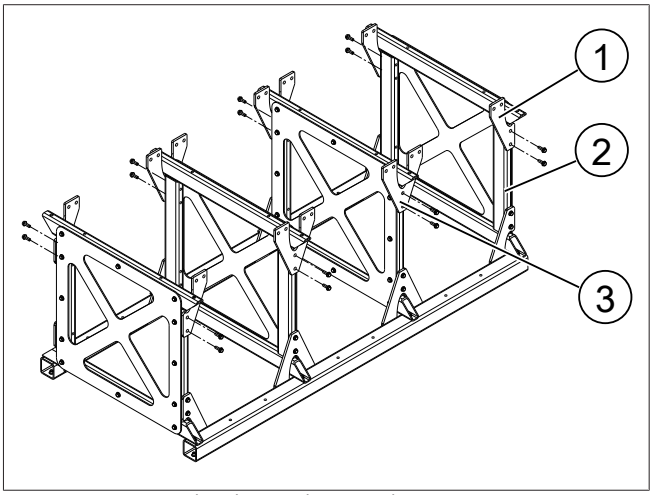

Fig. 9 Upper support brackets and support bars

1	Upper support bracket half	2	Support bar
3	Upper support bracket		

4. Screw the upper long bars to the upper side bars and the upper support brackets.

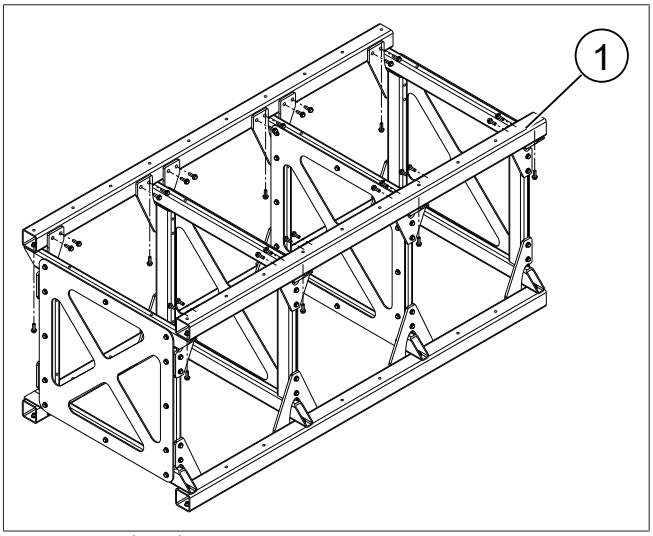

Fig. 10 Upper long bar

1	Upper long bar		

NOTE

For the V-PRO60 M and V-PRO90 M, an additional long bar is fastened to the side bars.

When using the Webasto sea water and cold water distribution sets, the long bar must be mounted on the front side of the rack. The front side of the V-PRO is the side facing away from the hydraulic connections.

The long bar for smaller units can also be used when installing a V-PRO130 M or V-PRO180 M and gives the rack additional rigidity.

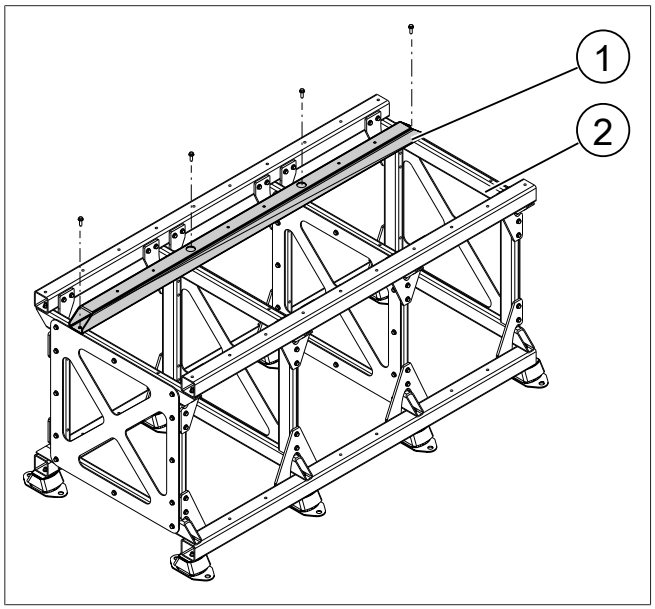

Fig. 11 Long bar for smaller units

1	Long bar for smaller units	2	Side bar

5. Use liquid screw fixer to fix all the screws, to prevent them coming loose due to vibrations.

5.3 Mount the chiller units

There is an option to first fully assemble the Webasto rack system and then install the chiller units, or first build the bottom row with chiller units and then the top row.

1. Place the units in the rack and screw the units tightly to the longitudinal members.
2. Use liquid screw fixer to fix all the screws, to prevent them coming loose due to vibrations.
3. The chiller units V-PRO60 M and V-PRO90 M are fastened to the additional long bar for smaller units. When using the Webasto sea water and cold water distribution sets, the long bar must be mounted on the front side of the rack. The front side of the V-PRO is the side facing away from the hydraulic connections.

6 Appendices

The parts lists are provided on the corresponding drawings; these provide information about the components required.

6.1 Technical drawing

The technical drawings give information about the dimensions and positions of the individual components in the rack as well as the tightening torques of the screws.

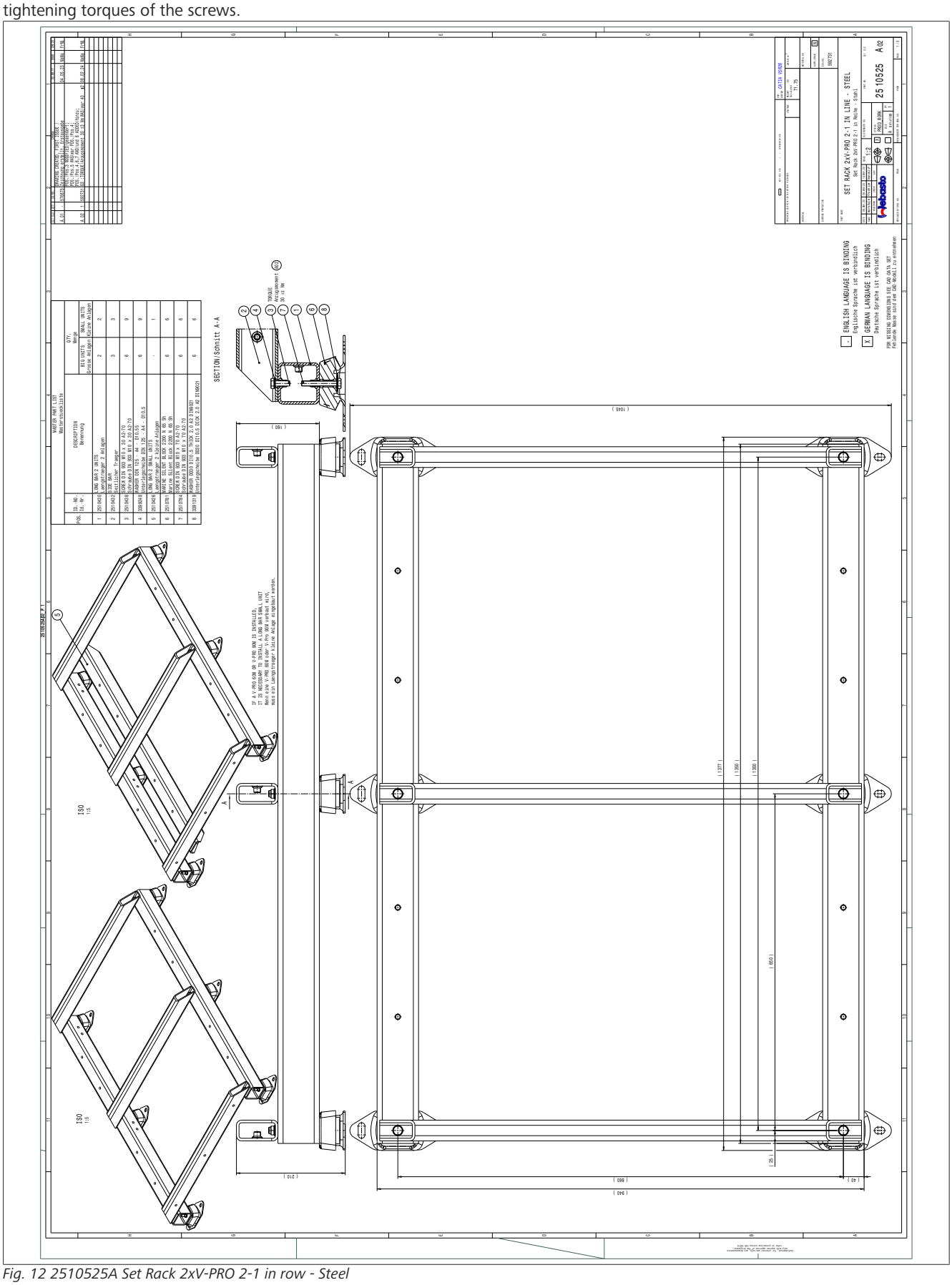

Fig. 12 2510525A Set Rack 2xV-PRO 2-1 in row - Steel

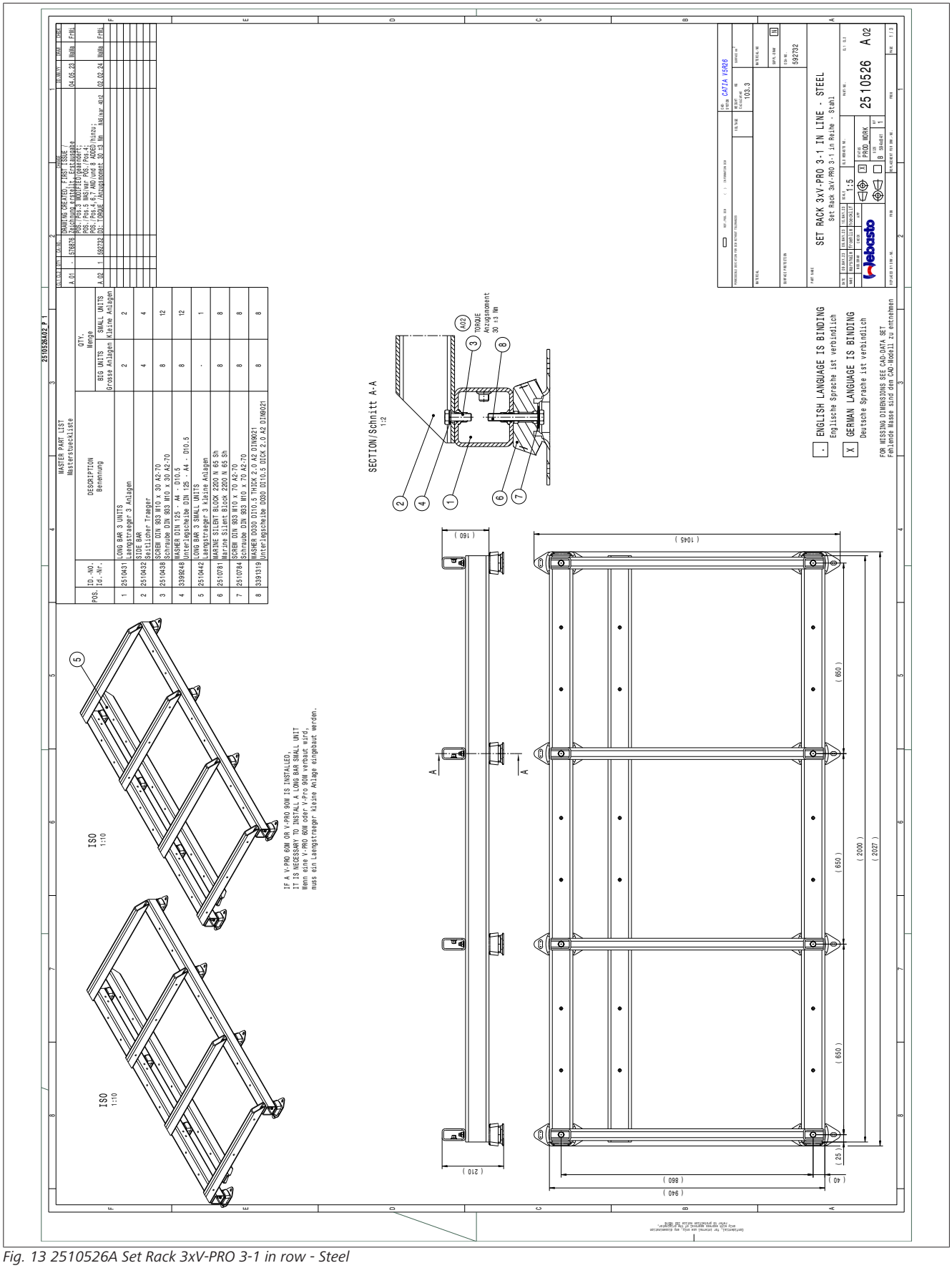

POS. Id.-Nr.	ID.-NO. Id.-Nr.	DESCRIPTION Benennung	QTY. Menge BIG UNITS Grosse Anlagen	QTY. Menge SMALL UNITS Kleine Anlagen
1	2510431	LONG BAR 3 UNITS Laengstraeger 3 Anlagen	2	2
2	2510432	SIDE BAR Seitlicher Traeger	4	4
3	2510438	SCREW DIN 933 M10 x 30 A2-70 Schraube DIN 933 M10 x 30 A2-70	8	12
4	3399248	WASHER DIN 125 - A4 - D10.5 Unterlegscheibe DIN 125 - A4 - D10.5	8	12
5	2510442	LONG BAR 3 SMALL UNITS Laengstraeger 3 kleine Anlagen	-	1
6	2510781	MARINE SILENT BLOCK 2200 N 65 Sh Marine Silent Block 2200 N 65 Sh	8	8
7	2510784	SCREW DIN 933 M10 x 70 A2-70 Schraube DIN 933 M10 x 70 A2-70	8	8
8	3391319	WASHER D030 D110.5 THICK 2.0 A2 DIN9021 Unterlegscheibe D030 D110.5 DICK 2.0 A2 DIN9021	8	8

Fig. 13 2510526A Set Rack 3xV-PRO 3-1 in row - Steel

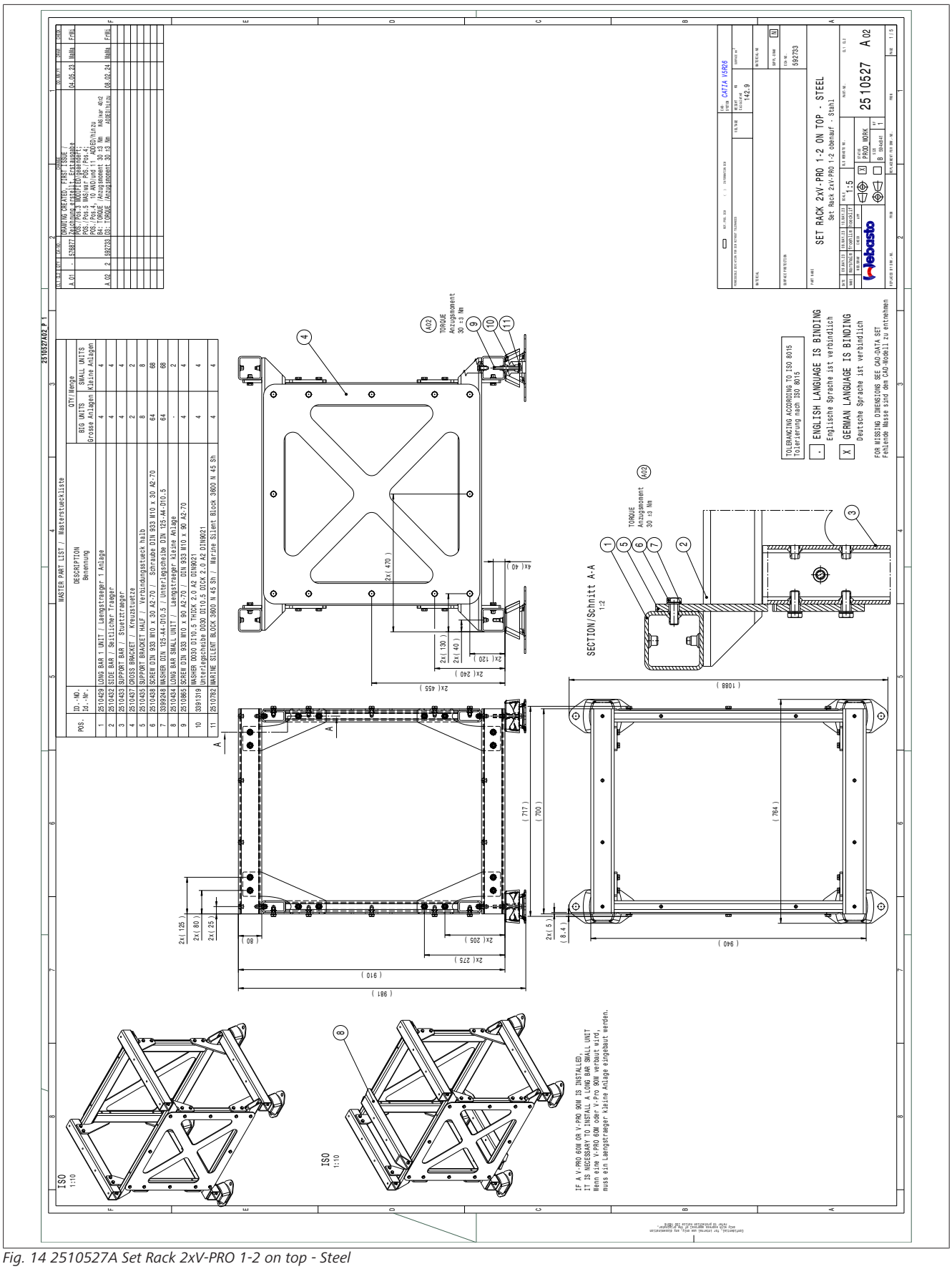

Fig. 14 2510527A Set Rack 2xV-PRO 1-2 on top - Steel

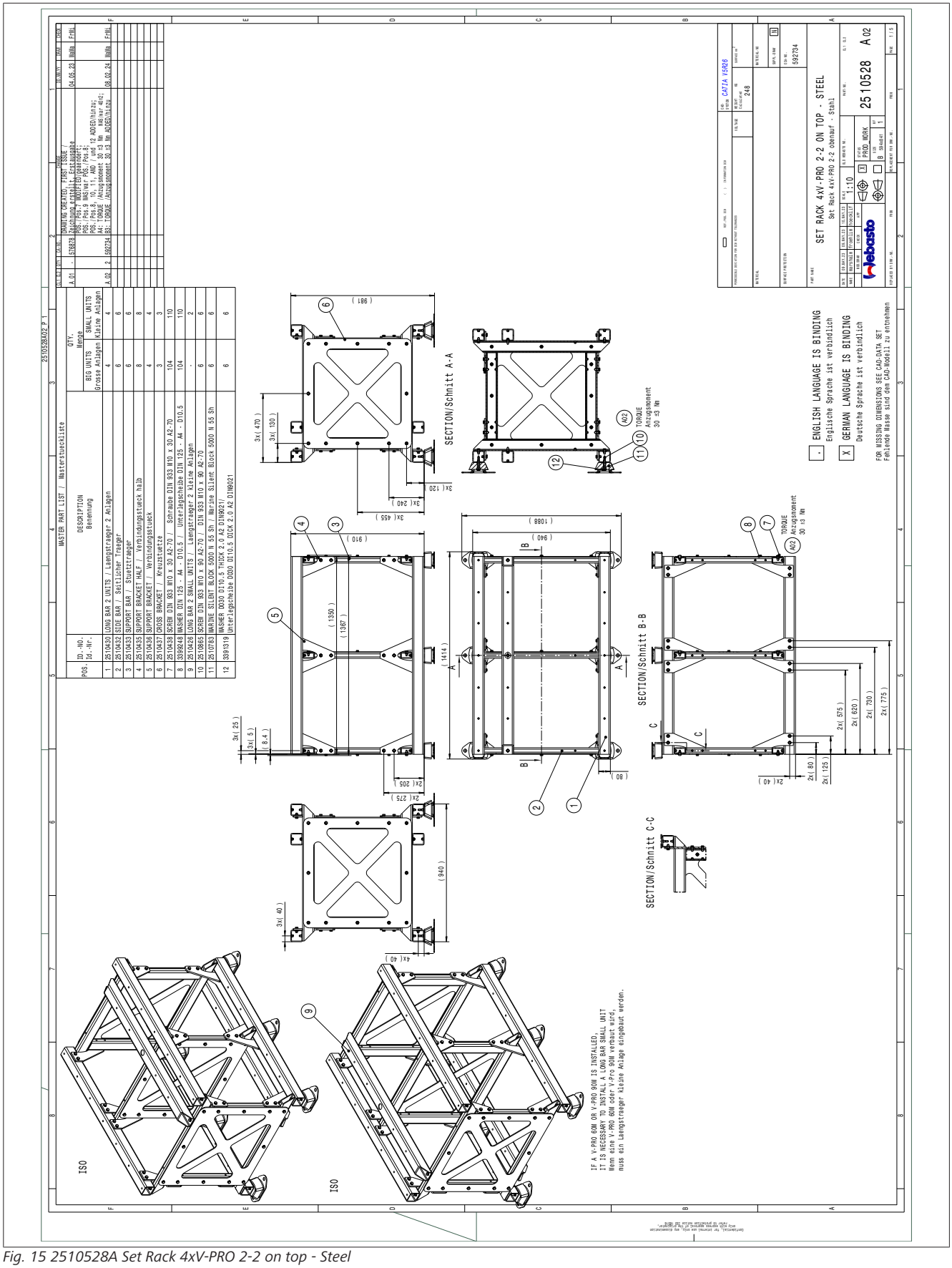

Fig. 15 2510528A Set Rack 4xV-PRO 2-2 on top - Steel

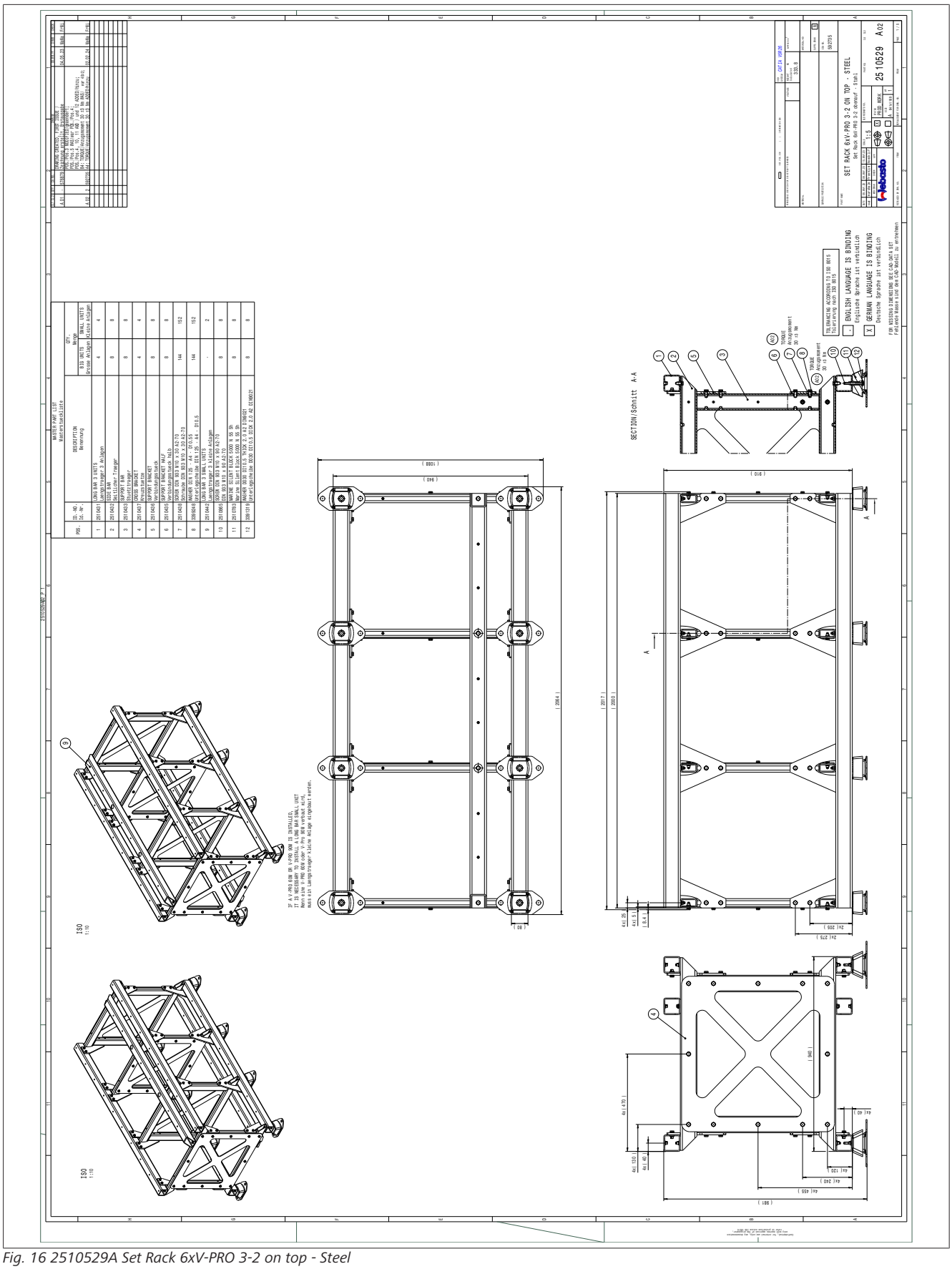

Fig. 16 2510529A Set Rack 6xV-PRO 3-2 on top - Steel

6.2 Overview of rack

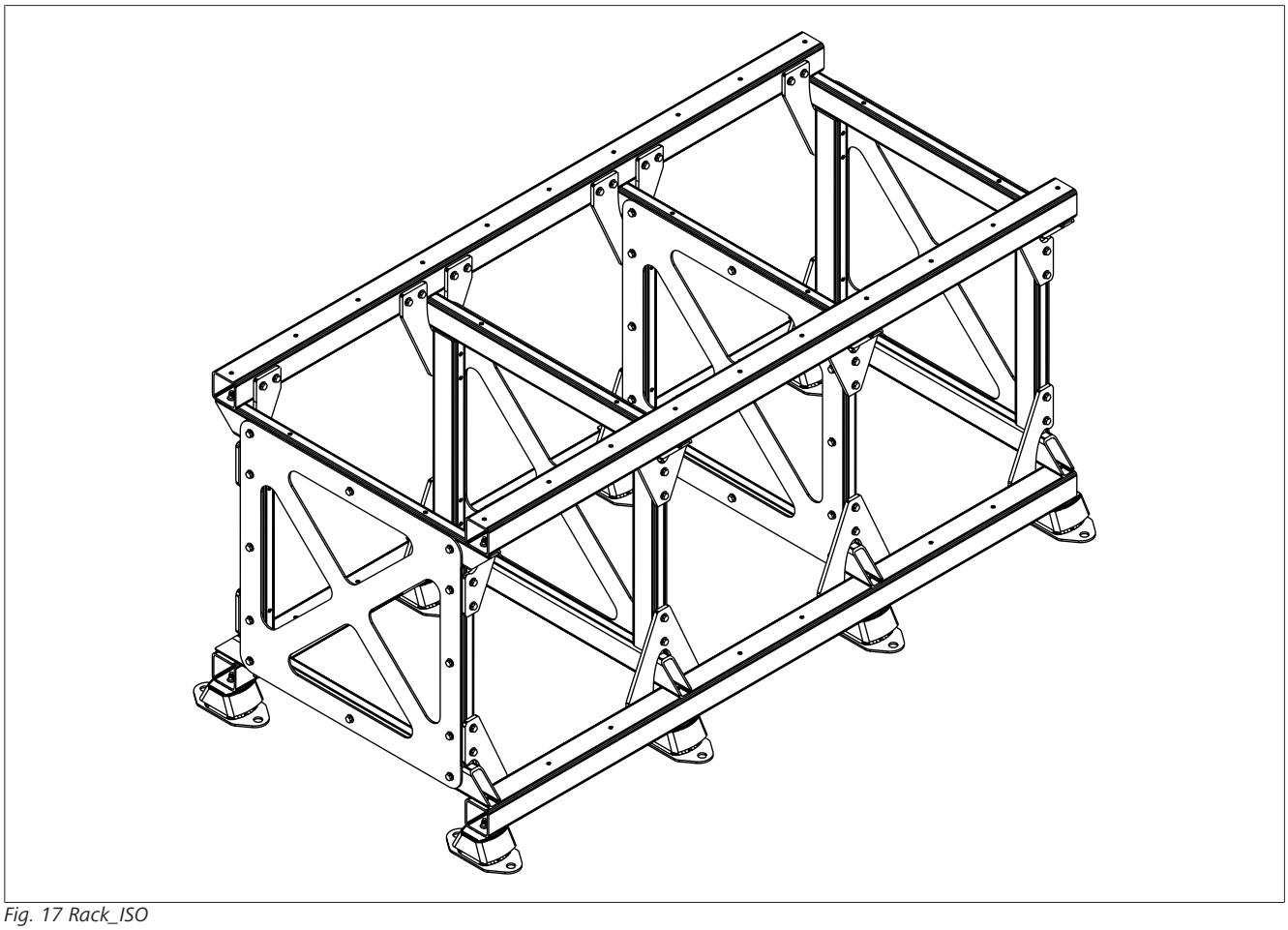

Fig. 17 Rack_ISO

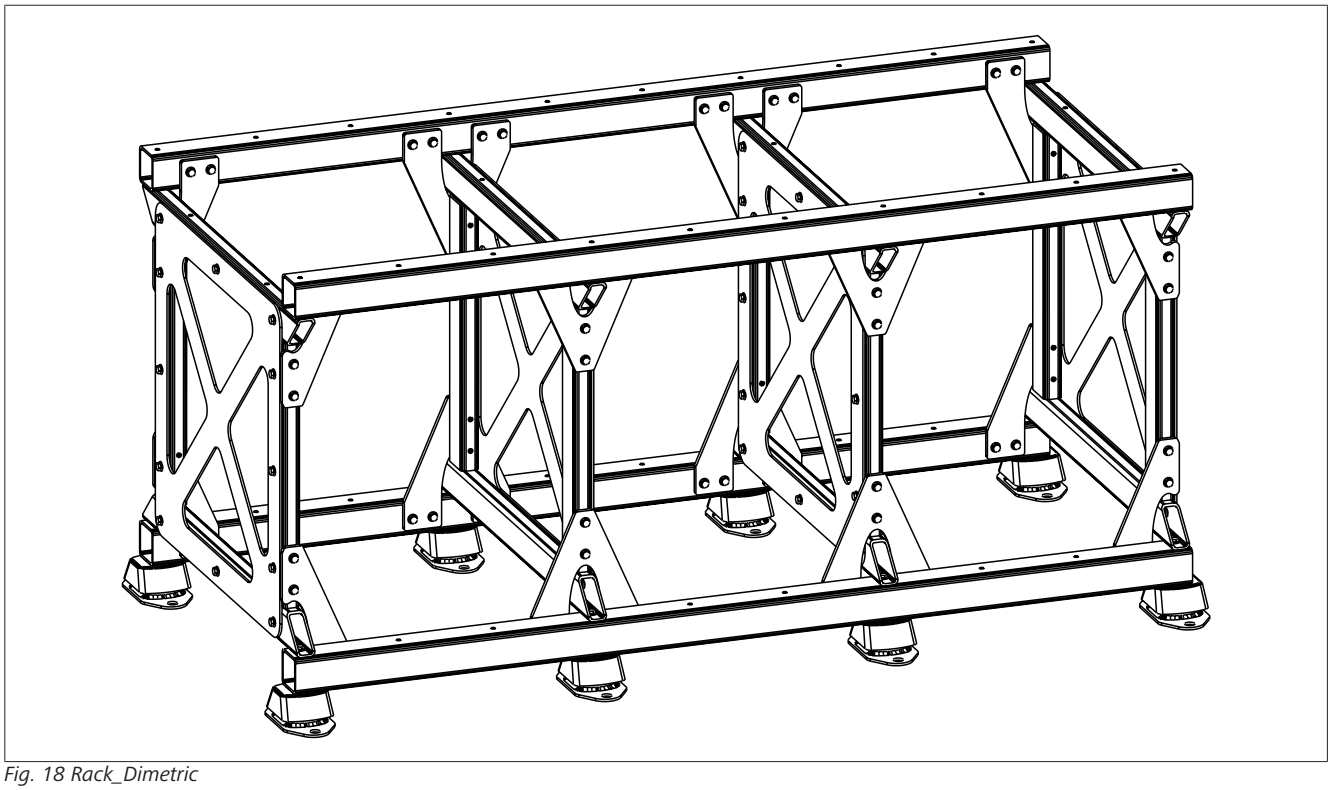

Fig. 18 Rack_Dimetric

To request this documentation in another language, please locate and contact your local Webasto dealer. You can find your nearest dealer at: https://dealerlocator.webasto.com/en-int.
To provide feedback (in English or German), please email: feedback2tdt@webasto.com

Ident No. 3318016B • 04/2024 • Errors and omissions excepted • © Webasto Thermo & Comfort SE

Europe, Asia Pacific:

Webasto Thermo & Comfort SE
Postfach 1410
82199 Gilching
Germany

Company address:
Friedrichshafener Str. 9
82205 Gilching
Germany

Technical website: https://dealers.webasto.com

Only within Germany
Tel: 0395 5592 444
Mail: technikcenter@webasto.com

UK only:

Webasto Thermo & Comfort UK Ltd
Webasto House
White Rose Way
Doncaster Carr
South Yorkshire
DN4 5JH
United Kingdom

USA only:

Webasto Thermo & Comfort N.A., Inc.
15083 North Road
Fenton, MI 48430

Technical Assistance Hotline
USA: (800) 860-7866
Canada: (800) 667-8900

www.webasto.us
www.techwebasto.com

3318016B

www.webasto.com