Webasto
Feel the Drive

Installation Instructions

Marine chiller air conditioning
BlueCool VX Series



English

Valid for BlueCool VX Series as of change index A (2023 ->):

VX36 M -230V -REV -R32 2510530A
VX48 M -230V -REV -R32 2510531A
VX60 M -230V -REV -R32 2510532A
VX72 M -230V -REV -R32 2510533A
VX120 M -230V -REV -R410A 2510534A
VX72 M -208V -REV -R32 2510535A

Table of Contents

1 About this document 3
1.1 Purpose of this document 3
1.2 Using this document 3
1.3 Use of symbols and highlighting 3
1.4 Warranty and liability 3
1.5 Webasto Service App 3

2 Safety 3
2.1 Intended use 3
2.2 Qualifications of installation personnel 3
2.3 Regulations and legal requirements 3
2.4 Safety on installation 4
2.5 Safety information for frequency-controlled equipment 4

3 Scope of delivery 4

4 Compatibility/recommended configuration/further documentation 4

5 Unit details 4
5.1 Conformity 4
5.2 Product variants 6
5.3 Type Label 6
5.4 Unit description 6

6 Installation 8
6.1 General 8
6.2 Installation Location 8
6.3 Installation example 8
6.4 Transporting the unit 8
6.5 Installing the Unit 9
6.6 Installing the sea water circuit 9
6.7 Installing the cold water circuit 10
6.8 Installing the condensed water drain line 12

7 Electrical connections 12
7.1 General 12
7.2 Connecting the chiller unit 13
7.3 Installing the BlueCool MyTouch control unit 13
7.4 Accessories 14

8 Operation 14
8.1 Description 14
8.2 Home screen and icons 14
8.3 Settings 15
8.4 Settings menu 16
8.5 Setting level 2 (Crew menu) 16
8.6 Setting level 3 (Parameter menu) 17

9 Commissioning 17
9.1 Check connections 17
9.2 Filling sea water pump head 17
9.3 Filling cold water circuit 18
9.4 Test run 19

10 Inspection and Maintenance 19
10.1 Sea water circuit 19
10.2 Cold water circuit 20
10.3 Electrical wiring 20
10.4 Checklist for inspection and maintenance 20
10.5 Repairing the Refrigerant Circuit 20

11 Decommissioning 20

12 Malfunctions 21
12.1 Troubleshooting 21
12.2 Faults that are displayed 21
12.3 LED display on the BlueCool VX-Series PC Board 21

13 Technical Data 26
13.1 Dimensions and minimum distances 28

14 Annex 29
14.1 Overview of control and setting levels 29
14.2 Parameter settings 29
14.3 Wiring diagrams 33

1 About this document

1.1 Purpose of this document

These Installation Instructions (II) are an integral part of the product and contain the information required to ensure correct and safe installation.

1.2 Using this document

Before installing the unit, read the installation instructions and the supplementary information "Important Information on Operating and Installation Instructions".

Technical documentation for BlueCool VX-Series is also available at http://dealers.webasto.com

For the operator:

- Operating instructions

For the installer (password-protected):

- Maintenance instructions
- Troubleshooting Guide
- Validation Report

1.3 Use of symbols and highlighting

This document uses warning labels and colours for hazard classification in accordance with ISO 3864:

See also https://www.iso.org/standard/55814.html.



DANGER

This signal word denotes a hazard with a high degree of risk which, if not avoided, will lead to death or serious injury.



WARNING

This signal word denotes a hazard with a moderate degree of risk which, if not avoided, may lead to minor or moderate injury.



CAUTION

This signal word denotes a hazard with a low degree of risk which, if not avoided, will lead to minor or moderate injury.



NOTE

This signal word denotes a Special Technical Feature or (if not observed) potential damage to the product.



Refers to separate documents which are enclosed or can be requested from Webasto.

✓	Requirements for the following necessary action.

1.4 Warranty and liability

Webasto shall not assume liability for defects or damage that are the result of the Installation Instructions / Operating Instructions and the instructions contained therein being disregarded.

This liability exclusion particularly applies to:

- Installation by untrained personnel.
- Improper use.
- Repairs not carried out by a Webasto service workshop.
- Use of non-genuine parts.
- Conversion of the unit without permission from Webasto.

1.5 Webasto Service App

The type label of the VX unit (see chapter 5.3, "Type label" on page 6) contains a QR code that can be used to call up further additional technical documentation in various languages. For this purpose, please use the Webasto Service App, which is available for download for iOS (Apple) and Android (Google). For more information about the app, visit:

https://dealers.webasto.com

2 Safety

2.1 Intended use

The BlueCool VX-Series is used for heating and cooling on boats and ships.

The BlueCool VX-Series has been built according to the current state of technology and the recognised safety rules.



DANGER

Improper or inappropriate use may result in danger to life and limb of the user and others, as well as impairment of the unit and other property.

Any other use of this product is not permissible.

Any other use of or changes to the product, including as part of assembly and installation, will result in any and all warranty claims being voided.



WARNING

Moving parts

Risk of injury, damage to the product.

The BlueCool VX-Series must only be operated in their final installed position.



WARNING

Ignition of surrounding gases or highly flammable liquids by sparking of the BlueCool VX-Series.

You must always switch off the air-conditioning system when refuelling, or while in a petrol station area.



WARNING

This appliance is not intended for use by persons (including children) with reduced physical, sensory or mental capabilities, or lack of experience and knowledge, unless they have been given supervision or instruction concerning use of the unit by a person responsible for their safety.

- ▶ Children should be supervised to ensure that they do not play with the unit.
- ▶ Cleaning and user maintenance must not be carried out by children.
- ▶ This unit should not be accessible to the public.
- ▶ Non-observance of these precautionary measures may lead to severe or mortal injuries.



NOTE

Follow these instructions carefully when installing the electric wiring and water pipes, the electrical boxes and the air ducts.

2.2 Qualifications of installation personnel

Installation personnel must have the following qualifications:

- Successful completion of the relevant Webasto training.
- Qualification applicable to working on technical systems.

2.3 Regulations and legal requirements

Regulations on the supplementary sheet “Important Information on Operating and Installation Instructions” must be observed.

2.4 Safety on installation

Danger posed by live parts:

- Disconnect the power supply before installation.
- Make sure the electrical system is earthed correctly.
- Always comply with all legal requirements.
- Observe the data on type label.

Risk of fire or toxic gases by incorrect installation:

- Protect components in the vicinity of the BlueCool VX-Series from impermissible overheating by implementing the following measures:
  - Maintain minimum safety clearance'. See also Technical Data and Dimensions and minimum distances.
  - Ensure adequate ventilation.
  - Use fire-resistant materials or heat shields.

2.5 Safety information for frequency-controlled equipment

Before carrying out maintenance:

- Disconnect the frequency converter and external control current circuits from the power supply, turn the main system switch to "**OFF**" and wait at least 5 minutes.
- Using a suitable multimeter, always check that no voltage is applied at the terminals.
- Always make sure that the drive motor of the compressor has come to a complete standstill. Motors that are still turning freely can produce dangerous voltages at the frequency converter terminal connections even when disconnected from the power supply.
- Check the temperature of the heat sink. Touching the heat sink can cause burns.
- Even when the drive motor of the compressor is not running, the motor terminals **U**, **V** and **W** are live when the frequency converter is connected to the power supply.
- Do not measure the insulation resistance or dielectric strength directly at the frequency converter or on the lines connected to the frequency converter.
- The control connections are disconnected from the system voltage. Nevertheless, the relay outputs can produce a dangerous control voltage even when the chiller unit is not connected to the power supply system.
- In certain applications, simply disconnecting the power supply at the input (inverter) is not enough to prevent damage to the system and ensure personal protection. Further appropriate safety measures are to be implemented for all applications where malfunctions could cause injuries or damage to the system.
- Observe all general and locally applicable safety standards for high voltage systems as well as the requirements governing correct use of personal protective equipment.
- Use this chiller unit only for the purposes specified by the manufacturer. Do not make any modifications and no account replace any components unless approved by the manufacturer. Disregard of these requirements can result in fire, electric shock or other damage.

3 Scope of delivery

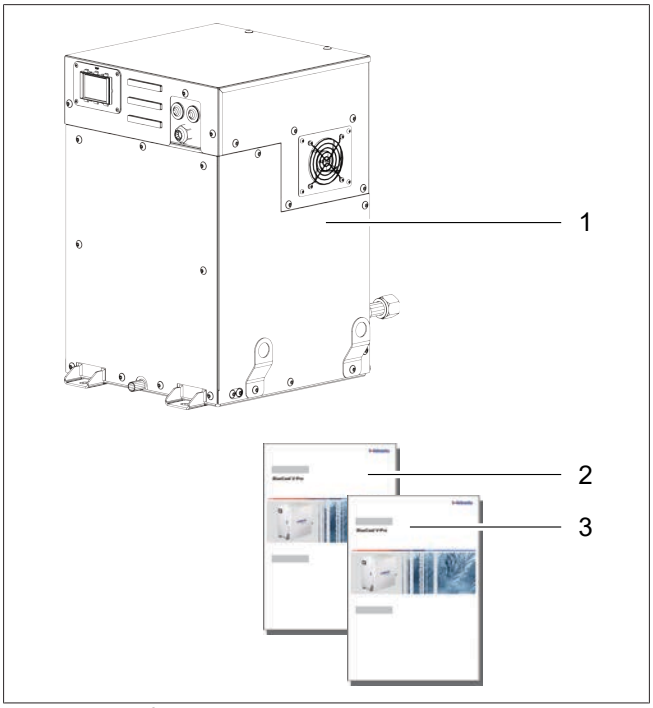

Fig. 1 Scope of delivery, example BlueCool VX-Series unit

1	Chiller unit BlueCool VX-Series	2	Installation Instructions
3	Operating instructions		

4 Compatibility/ recommended configuration/further documentation

Other system accessories are available for the BlueCool VX-Series. These include, amongst other things, distributors for cold water and sea water, mounting rack and application-specific electrical boxes. Notes about the design, installation and configuration of these accessories can be found in the relevant documentation.

5 Unit details

5.1 Conformity

- 2014/30/EU Electromagnetic compatibility (EMC)
  See also: https://eur-lex.europa.eu/legal-content/EN/TXT/?uri=CELEX%3A32014L0030&qid=1678353923671
- 2006/42/EC Machine directive
  See also: https://eur-lex.europa.eu/legal-content/EN/TXT/?uri=CELEX%3A32006L0042&qid=1678353600345
- 2011/65/EU RoHS
  See also: https://eur-lex.europa.eu/legal-content/EN/TXT/?uri=CELEX%3A32011L0065&qid=1678353780822

Webasto air conditioning units are designed in such a way that, in the installed state, they do not exceed the emission sound pressure level threshold as defined in the Machinery Directive 2006/42/EC paragraph 1.7.4.2. (u).

5.1.1 Declarations of conformity

UK-Konformitätserklärung
UK-Declaration of Conformity

Hersteller	**Webasto Roof & Components SE**
Manufacturer	Kraillinger Strasse 5 82131 Stockdorf Germany

Für die Verwendung der Webasto Marine Klimaanlagensystems
For the use of the Webasto Marine air-conditioning system

BlueCool VX Series
VX36 M -230V-REV -R32, VX48 M -230V-REV -R32,
VX60 M -230V-REV -R32, VX72 M -230V-REV -R32,
VX120 M -230V-REV -R410a, VX72 M -208V-REV -R32

Richtlinie Directive	Harmonisierte Normen Designated Standards
Supply of Machinery (Safety) Regulations 2008	EN 60335-1:2012/A15:2021 EN 60335-2-40:2003/A13:2012/AC:2013 EN ISO 12100:2010 EN 61310-2:2008
Electromagnetic Compatibility Regulations 2016	IEC 60533:2015
RoHS Regulations 2012	

Safety Requirements of
Electrical Equipment (Safety) Regulations 2016 met

Ort und Datum der Ausstellung
Place and Date of issue
Gilching, den 01.07.2024

i.V.
J. Hornung
VP BL Battery/Thermo Management EC
Thermo Management (TM)
Webasto Roof & Components SE

i.A.
J. Belz
Certification & Compliance Expert
Webasto Roof & Components SE

Original in deutscher Fassung.
Original in German version.

Die alleinige Verantwortung für die Ausstellung dieser Konformitätserklärung trägt der Hersteller.
This declaration of conformity is issued under the sole responsibility of the manufacturer.

5.2 Product variants

Chiller unit:

- VX36 M -230V –REV –R32
- VX48 M -230V –REV –R32
- VX60 M -230V –REV –R32
- VX72 M -230V –REV –R32
- VX120 M -230V –REV –R410A
- VX72 M -208V –REV –R32

VX36 M -230V –REV –R32	
VX	BlueCool VX series chiller unit
36	Cooling capacity in kBTU/h
M	Mono (1 compressor with 1 closed refrigerant circuit)
230 V	Rated voltage
REV	“Reverse Cycle” cooling and heating (reverse heating operation)
R32 R410a	Refrigerant

Table 1: Example

5.3 Type Label

The type label is located next to the cable feed-through for electrical connection at the front of the unit. The type label details the output, serial number and registration data.

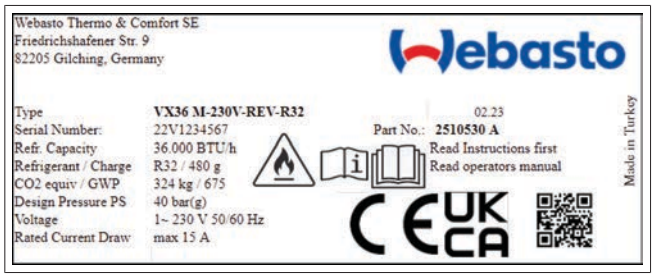

Fig. 2 Type label

5.4 Unit description

5.4.1 General

The BlueCool VX-Series is an air-conditioning system with its four basic components, i.e. compressor, condenser, evaporator and throttle element.

Evaporator (liquid heat exchanger)

- Refrigerant vaporises at low pressure and a temperature below the cold water temperature, thus absorbing heat from the cold water circuit in the process.

Compressor (refrigerant compressor)

- The refrigerant vapour extracted from the evaporator at low pressure is compressed to a higher pressure, and therefore to a higher temperature. In the process, additional heat is fed to the refrigerant.

Condenser (sea water heat exchanger)

- The compressed, heated refrigerant vapour is condensed at a temperature which is above the sea water temperature. In the process, the entire heat absorbed in the evaporator and compressor is given off to the sea water.

Throttle element (electronic expansion valve)

- The pressure in the refrigerant subjected to condensing pressure is relieved and transferred to the evaporator.

5.4.2 BlueCool VX36 M

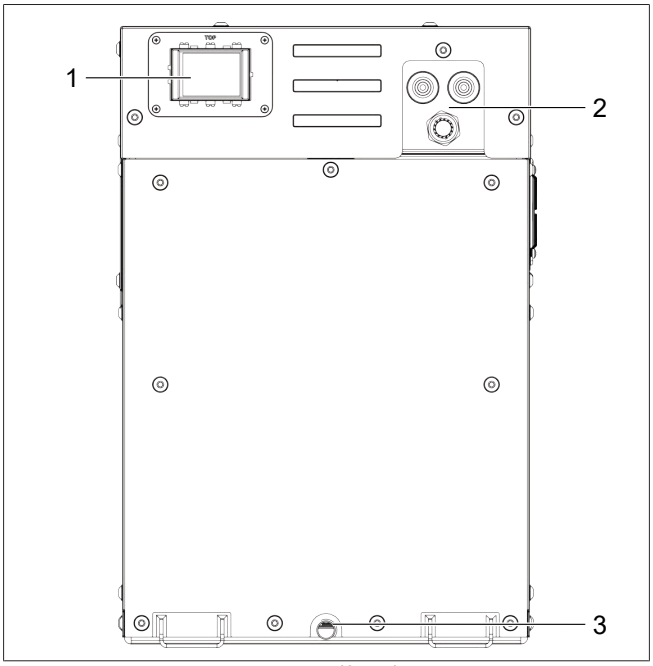

Fig. 3 BlueCool VX36 chiller unit (front)

1	MyTouch display	2	Cable lead-through for system connection
3	Condense water drain		

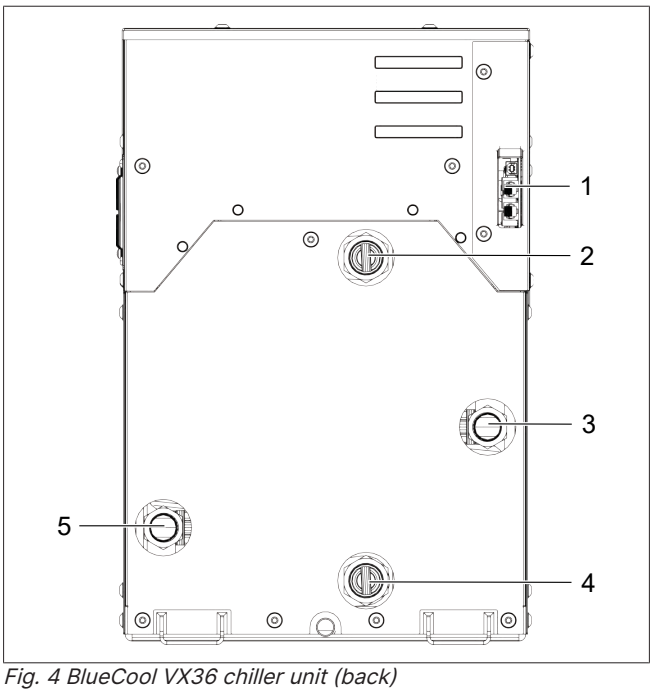

Fig. 4 BlueCool VX36 chiller unit (back)

1	2x system bus and diagnostics connection	2	Cold water inlet
3	Sea water outlet	4	Cold water outlet
5	Sea water inlet		

5.4.3 BlueCool VX36 M

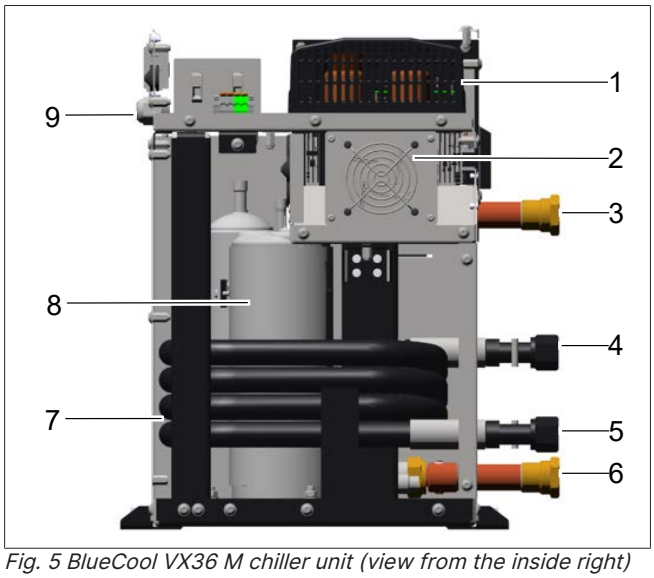

Fig. 5 BlueCool VX36 M chiller unit (view from the inside right)

1	Inverter	2	Inverter fan
3	Cold water inlet	4	Sea water outlet
5	Sea water inlet	6	Cold water outlet
7	Titan condenser	8	Compressor
9	Cable lead-through		

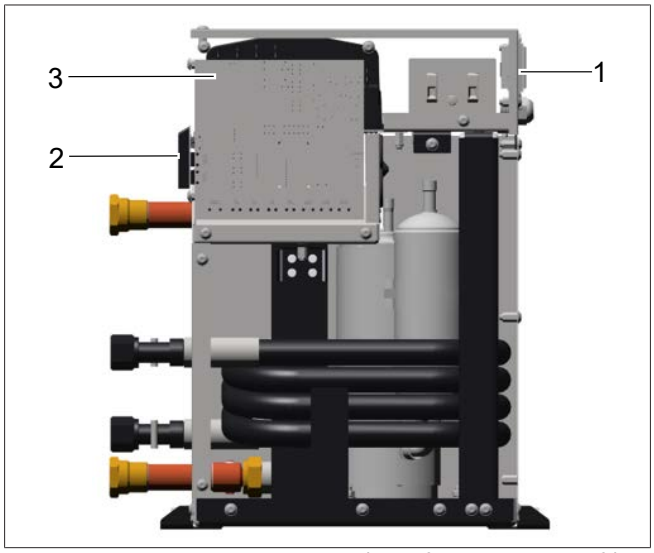

Fig. 6 BlueCool VX36 M chiller unit (view from the inside left)

1	MyTouch display	2	VX system bus + diagnostics
3	VX series PC board		

5.4.4 Cooling operation mode

Heat transfer in Webasto BlueCool VX-Series air conditioning system takes place in a two-stage process. Circulating cold water (a water/glycol mixture) serves as the heat transfer medium.

In cooling mode, the cooling water flows in a closed circuit from the BlueCool VX-Series air-conditioning system to a series of air handlers located in various cabins. Heat is absorb from the room air. The cooled air is blown into the room by the fan of the air handler. The room air is cooled by approx. 15°K.

The heated cold water is routed through piping systems to the BlueCool VX-Series chiller unit and gives off the heat via an evaporator (liquid heat exchanger) to the refrigerant circuit. The supplied heat causes the refrigerant to evaporate.

The compressor now compresses the refrigerant vapour, which is then condensed to a liquid when flowing through a condenser cooled with sea water. The heat released is emitted to the sea water. The condensed refrigerant passes through the throttle element and the pressure is relieved to form wet vapour on entering the evaporator.

The refrigerant is evaporated and superheated again, thus absorbing heat from the cold water. The cooled cold water is now fed again to the air handler, thus closing the cooling circuit.

NOTE

With these air-conditioning systems, sea water flows through the condenser, which is sucked in via a pump. This ensures the cooling process. BlueCool VX-Series air conditioning system is designed for maximum sea water temperatures of 40 °C.

5.4.5 Heating operation mode

BlueCool VX-Series air conditioning system that is designed as "Reverse Cycle" system can also produce heat. A 4/2-way reversing valve is installed in the system for this purpose. As a result, the condenser becomes an evaporator and vice versa.

The sea water heat exchanger (now evaporator) takes available heat away from the sea water which is then transferred to the refrigerant. The evaporator now becomes the condenser and gives off the condensation heat to the cold water and heats it up to 50 °C.

NOTE

Heating mode becomes inefficient when the sea water temperature drops to below 6 °C as sufficient heat can no longer be taken from the cold sea water. The interior air then cannot be heated sufficiently. In this case we recommend you use diesel-operated Webasto water heaters that can be easily integrated in the cooling water circuit.

Refer to Webasto BlueComfort Premium systems for more details.

This will make heating mode completely independent of adverse ambient conditions.

6 Installation

6.1 General

NOTE

To ensure proper operation, all components must be positioned and installed in accordance with their installation instructions.

6.2 Installation Location

WARNING

Danger of fire and explosion.

Do not install the BlueCool VX-Series in areas with highly flammable liquids or gases.

6.2.1 Installation location requirements

- There must be sufficient space to access water connections and electrical connections. See also Technical Data and Dimensions and minimum distances.
- The system must be fully accessible for service and maintenance purposes.
- The VX-Series unit must be mounted on an even, horizontal surface.
- The VX-Series unit must not be directly exposed to splash water, overwash or rain and other environmental conditions.
- The VX-Series unit is approved for a maximum ambient temperature of 60 °C. To avoid local ambient temperatures in excess of 60 °C, the chiller unit must not be installed in the immediate vicinity of heat sources.
- The VX-Series unit must be installed at a minimum distance of 3 meters from radio receivers and transmitter aerials in the general energy distribution zone. This will ensure interference-free operation in accordance with IEC 60533. See also https://www.document-center.com/standards/show/IEC-60533.

6.3 Installation example

The side with the electrical connection and the ventilation slots are on the front side and must be accessible for the electrical connection as well as for inspection of said connections.

6.3.1 Together with heat exchanger

The Fig. 7 shows an example of typical installation of a BlueCool VX-Series air-conditioning system.

In addition to the BlueCool VX-Series, a further 3 air handlers are shown in this installation example for heating and cooling the respective cabins.

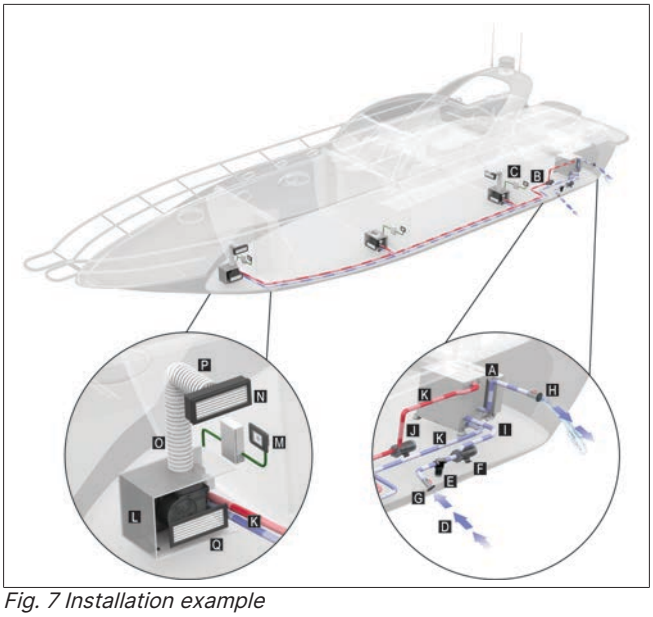

Fig. 7 Installation example

A	BlueCool chiller unit	J	Cold water pump
B	Control unit in a cabin (BlueCool MyTouch)	K	Insulated cold water line
C	BlueCool A-Series	L	Air handler
D	Sea water inlet	M	Cabin control panel (BlueCool MyTouch with connection cable, temperature sensor and electrical box)
E	Sea water strainer		
F	Sea water pump	N	Air outlet grille
G	Sea valve	O	Flexible air duct
H	Sea water outlet	P	Transition box
I	Sea water line	Q	Air inlet grille

6.4 Transporting the unit

WARNING

Risk of injury if the unit is dropped or carried incorrectly.

The unit is heavy and must not be carried incorrectly.

The VX-Series chiller unit can be carried:

- at the underside (1).
- via suitable / stable lifting equipment (lifting straps, crane eyes) on the system's lifting eyes (2).
- via suitable / stable lifting slings that are guided beneath the system.

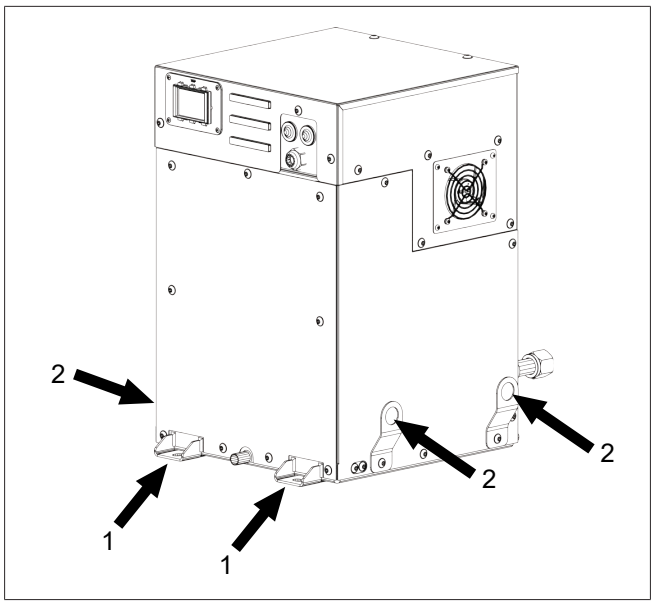

Fig. 8 Transporting the unit

6.5 Installing the Unit

CAUTION

Danger of damage to the electrical components, and refrigerant loss.

Do not remove covers, caps or fittings.

The housing of the VX-Series chiller must be shut tight during operation.

6.5.1 Mounting the unit

NOTE

- ▶ You must be able to remove the VX-Series unit for maintenance or other purposes.
- ▶ If vibration dampers are used, this will increase the height of the installed system.
  Observe the information provided in the vibration damper installation instructions.

To put the unit in place:

1. Secure the chiller unit at the bottom anchor points to the mounting surface.
2. Suitable fasteners points must be selected and the attachment points must be sufficiently stable.
3. Both the static load of the system and the dynamic loads that arise through ship movement must be safely absorbed.

6.6 Installing the sea water circuit

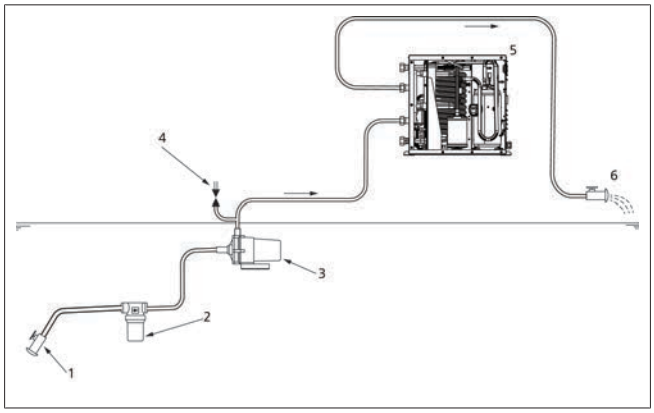

Fig. 9 Installation example

1	Through-hull fitting with sea valve	2	Sea water strainer
3	Sea water pump	4	Bleeding
5	Chiller unit	6	Sea water outlet

NOTE

The sea water components are installed continuously ascending from the through-hull fitting via the strainer and pump up to the chiller unit. This arrangement ensures that bubbles, which would otherwise cause the pump to malfunction, cannot collect in the sea water circuit.

6.6.1 Installing through-hull fitting for the sea water inlet

The sea valve on the through-hull fitting is used for safety and maintenance purposes.

Install through-hull fittings, seal off with sealant and check for leak-tight seating.

DANGER

Sea water enters when installed incorrectly.

Boat can sink; danger of drowning.

Suitable measures must be taken to install the through-hull fitting in order to prevent an unchecked entry of sea water.

NOTE

The sea water inlet must be arranged at the lowest possible point below the water line and below the sea water pump. The through-hull fitting for the sea water inlet must be installed with the opening facing in direction of travel in order to create a boosting backpressure in the intake line.

- ▶ Sailboats: install the through-hull fitting near the centre of the hull.
- ▶ Fast motor boats: install through-hull fitting in rear section of hull.

6.6.2 Installing sea water pump

NOTE

Webasto recommends installing the sea water pump at least 0.25 m below the water line. If installation below the water line is not possible, a self-priming pump must be used.

Selecting sea water pump

To increase the operating safety, Webasto recommends the use of self-priming pumps. These are significantly less susceptible to air accumulations, which can enter the system during reverse travel or when in a tilted position, for example.

Self-priming sea water pumps

If a self-priming pump is installed above the water line, the pump head must be pre-filled during initial start-up or after longer times at standstill to enable self-priming.

Pump characteristics

- The pump characteristics enable the selection and dimensioning of the sea water pump depending on expected pressure losses in the entire system.
- Operating the pumps outside the pump characteristic can damage the pumps due to motor overloading or cavitation.
- Damage which occurs due to improper operation is excluded from the warranty.
- The delivery head of a pump is often specified in metres water column and represents the pressure drop between the pump inlet and outlet. This pressure drop corresponds to the total pressure differential in the sea

water system from the sea water inlet up to the sea water outlet. Do not confuse this with the position of the pump below the water line.

- The effective water flow through the pump and therefore through the sea water system changes considerably depending on the pressure drop.
- The minimum sea water flow rate through the air-conditioning system must be maintained at all times. This should be checked every time the system is placed into operation.

NOTE

Make sure that the pump is accessible for maintenance work. It is urgently recommended that a vent be installed directly behind the outlet opening of the sea water pump to allow the collected air bubble to escape when the system is started up.

See Fig. 9.

6.6.3 Installing sea water strainer

NOTE

Match the size of the sea water strainer to the sea water quality. If a great deal of dirt is to be expected, then a strainer of the corresponding size should be chosen. The sea water strainer must be installed between the through-hull fitting and the sea water pump. Comply with specified direction of flow. Make sure that the sea water strainer is accessible for maintenance work.

Install the sea water strainer in accordance with the manufacturer's specifications.

6.6.4 Installing sea water outlet

NOTE

The sea water outlet must be installed approx. 0.10 m above the water line. Do not install the sea water outlet in the bow area of the ship to prevent back flow.

The sea water outlet may not be mounted below the waterline. Although this leads to a reduction in the operating noise of the sea water outlet, it increases the counterpressure in the system and significantly lowers the flow rate and thus the system capacity.

6.6.5 Installing sea water lines

DANGER

The boat may sink; risk of drowning as sea water enters when installed incorrectly

Install double hose clamps on sea water lines. Install the two hose clamps mirror-inverted.

NOTE

Pay attention to the minimum required diameter of the sea water lines. Only use reducers when this serves the specific distribution of the volume flows when several systems are connected to one pump.

Avoid 90° fittings wherever possible as they create a considerable pressure loss, thus unnecessarily reducing the sea water flow. It is preferable to install the line in a kink-free bend.

On the intake side of the pump, it is advisable to use a line with over-dimensioned cross-section, as soiling can occur here most frequently, resulting in an unintentional reduction of the flow rate.

The sea water lines must be installed as follows:

- ▶ as short as possible,
- ▶ kink-free,
- ▶ without water pockets,
- ▶ protected against rubbing.

Install intake line(s) so that there is a slight upward incline from the sea water inlet to the chiller unit. Install pressure line(s) to the chiller unit and to the sea water outlet.

6.7 Installing the cold water circuit

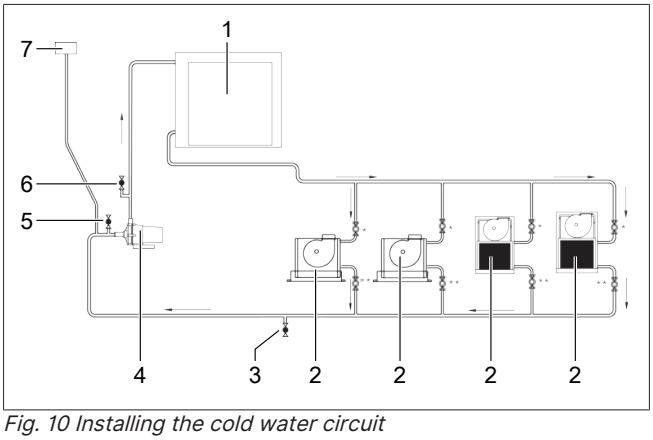

Fig. 10 Installing the cold water circuit

1	Chiller unit	2	Air handler
3	Drain valve	4	Cold water pump
5	Filler connection (T-piece with shut-off valve)	6	Bleeding
7	Expansion tank		

For maintenance purposes Webasto recommend the installation of a shut-off valve at the inlet (*) and outlet (**) of each air handler. The line leading to the expansion tank can be used to fill the circuit if it rises over its entire length (no downward section at any point). Otherwise, use the filler connection and temporarily fit a filler hose with filler reservoir (the filler reservoir must be positioned at the highest point and above the highest air handler). The filler hose must be transparent and have a minimum inside diameter of 15 mm. A drain valve at the lowest point in the cold water circuit allows the circuit to be completely emptied after an initial pressure test has been conducted or when it is uncertain whether the cold water contains the necessary percentage of glycol (antifreeze).

6.7.1 Open or closed system

The cold-water circuit can be designed as an open system with a non-pressurised expansion tank or as a closed, pressurized system with a diaphragm expansion tank.

NOTE

Webasto recommends using a pressurised system wherever possible. The advantage of this system is a lower air intake during operation, resulting in fewer air bubbles. This has a positive effect on the overall performance. It also makes the use of an expansion tank unnecessary.

In an open system, the expansion tank must be at the highest point in the circuit. You must take into account the possible angle of heel while sailing. Expansion tanks must always be connected on the intake side of the cold-water pump.

6.7.2 Antifreeze

Make sure that there is sufficient antifreeze in the cold-water circuit. Antifreeze prevents the system from freezing during operation. Antifreeze also makes your vessel winterproof without having to drain the cold-water circuit.

NOTE

The water/glycol mix ratio should be 25% to 40% glycol and 75% to 60% fresh water. A lower glycol percentage will result in the evaporator freezing and breaking down in cooling mode, voiding any product warranty claims with Webasto.

If there are leaks in the cold-water system, you must not top up the system with fresh water only. This will dilute the mix ratio and frost protection will no longer be guaranteed. At particularly low ambient temperatures in winter, you must increase the glycol level in order to prevent the lines from freezing. You can use commercially available glycol, as used in motor vehicles, for this purpose.

6.7.3 Flow rates

The cold water circuit of the BlueCool VX-Series operates with an average temperature difference between inflow and return of around 5 K, e.g. 7 °C flow temperature and a return flow temperature of 12 °C. However, the actual temperature difference depends on influencing factors such as outside air temperature or cooling load for example.

The minimal temperature difference requires a considerably higher flow rate than in domestic heating applications.

NOTE

To achieve the full cooling capacity and trouble-free operation,maintain the specified minimum flow rates (see Section chapter 13, "Technical data" on page 26).

6.7.4 Cold water pump selection

The pump characteristics facilitate the selection and sizing of the cold water pump, based on the pressure losses to be expected in the entire system.

Operating the pumps outside the pump characteristics may result in damage to the pumps due to motor overloading or cavitation. Damage which occurs due to improper operation is excluded from the warranty.

The delivery head of a pump is often specified in MLC (metres of liquid column) and represents the pressure drop between the pump inlet and outlet. This drop corresponds to the entire pressure loss in the cold water system. Do not confuse the MLC with the height difference between the pump and the highest air handler.

The minimum volumetric cold water flow rate through the air-conditioning system must be maintained at all times.

6.7.5 Cold-water pump installation

Complete the following steps:

1. Install the cold water pump, making sure that the pump is accessible for maintenance work.
2. Fit a T-piece to the inlet of the pump for filling purposes.
3. Install a vent directly after the pump outlet.

6.7.6 Installing cooling water lines

NOTE

Ensure that, for each branch, the sum of the nominal cross-sections of the branches is not less than the nominal cross-section of the cold-water supply.

Only use reducers when this serves the specific distribution of the cold-water flow.

The cold-water lines must be installed as follows:

— as short as possible

— kink-free

— protected against rubbing

Avoid 90º fittings wherever possible. These create a considerable pressure loss and reduce the cold-water flow. You must install the line in a kink-free bend.

Use fittings with a generous radius, if necessary. These have a lower pressure loss. The pressure loss is considerably higher in 90° fittings with a tight radius. If pipe bends with a wide radius are not available, then use two 45° bends with a tight radius fitted one after the other.

In addition to the pump output, the effective flow rate in the cooling water circuit greatly depends on the resistance to flow in the entire system. All components present resistance to flow. To maintain the minimum required flow rate it is essential to keep resistance to flow, or pressure loss, as low as possible in the entire system.

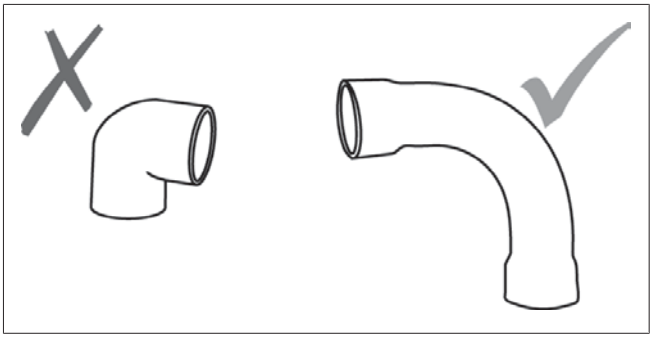

Fig. 11 Use pipe bends with large radius

You can use rigid plastic pipes and/or flexible, reinforced hoses as cold water lines. Primary lines should at least have the same diameter as the connections of the BlueCool VX-Series unit. Secondary lines used as branches to air handlers must have the same diameter as the connections of the air handlers. To add a secondary branch, preferably use Y-pieces.

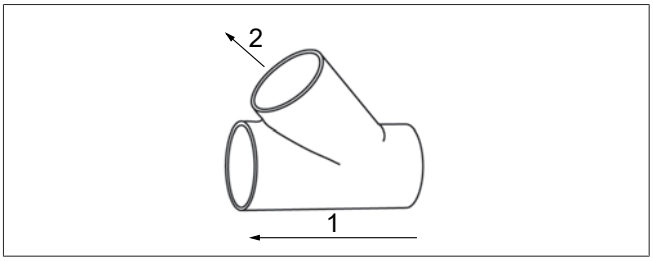

Fig. 12 Y-junction

1	Cold water flow, main line
2	Cold water flow, secondary line

If no Y-pieces are available, make sure that the diameter of the secondary line is reduced only after the T-branch in order to keep the inlet diameter as large as possible.

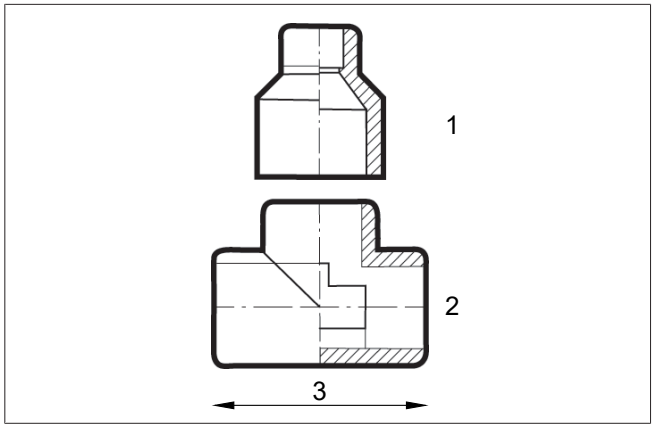

Fig. 13 T-piece and reducer pipe

1	Reducer pipe
2	T-piece
3	Cold-water flow, main line

Install the cold water lines as shown in Fig. Installation example coldwater or Fig. 21 .

6.7.7 Insulation

CAUTION

Water damage may occur.

Danger of water damage to furniture, units, etc. as a result of condensation.

Adequately insulate air duct lines.

Condensation forms on the lines of the cold-water circuit as their temperature in normal operation is far below the dew point temperature of the ambient air.

Condensation may settle unchecked and cause damage to furniture, installed equipment etc.

Make sure that all the cold-water circuit lines are adequately insulated to prevent condensation forming.

- For insulation purposes, only use closed-cell foam materials that are suitable for low-temperature applications.
- Foam material insulation should be at least 0.35 in. (9 mm) thick.
- Do not use material with an adhered longitudinal joint. This may detach over time.
- When fitting insulated pipes, make sure that insulation is not obstructed.

6.7.8 Cold water temperature sensors

NOTE

To ensure the system operates satisfactorily, the cold water temperature sensors pre-installed at the factory must be left in their installed positions. They control the cold water circuit and prevent the evaporator from freezing.

Tampering with the cold water temperature sensors fitted at the factory will render any product warranty claims with Webasto null and void

6.7.9 Installing the air handlers

The selection, installation and setting of the air handlers is carried out in accordance with the separate Installation Instructions enclosed with the air handlers.

6.8 Installing the condensed water drain line

CAUTION

Danger of water damage.

Danger of water damage to furniture, devices, etc..

- ✓ Do not connect the condensed-water drain line to the sea water line of the air conditioning system.
- ✓ Ensure the condensed-water tray drains off properly to prevent damage caused by condensation backing up.
- ✓ Route the condensed-water drain line with a downhill slope and without water pockets to ensure sufficient emptying of the condensed-water tray and to prevent damage by backed-up condensed water.

NOTE

▶ Make sure that the unit is mounted securely.

- ✓ The diameter of the condensed-water drain line must match the condensed-water drain fitting on the condensed-water tray.
- ✓ Connect the condensed-water tray via the condensed-water drain line to the bilge or other condensation/water collection points.
- ✓ There must be no backpressure in the condensed-water drain line.
- ✓ If necessary, create a new water collection point, including a pump, level switch and drain line.
- ✓ Secure the hose connector to the connection socket of the condensed-water tray. Ensure leak-proof fit.

7 Electrical connections

7.1 General

DANGER

Connection to your 230 V electrical system

Danger of injuries or fatal accidents and damage to the air-conditioning system or other electrical devices.

Installation must only be carried out by persons who are certified to carry out work on 230V electrical systems.

Before working on the electrical system, the system must be disconnected from the power supply.

DANGER

Risk of electric shock!

A suitable residual current device (RCD) with a rated residual current of 30 mA must be available for this device in the upstream electrical installation. The RCD serves as additional protection against electrical shock hazards. The same applies to all pump relay and electronic boxes offered as accessories.

CAUTION

As with all inverter devices, parts may still be live for a period of time even after disconnection from the power supply. Wait several minutes after disconnection.

In addition to the power supply for the system, a separate power supply must be provided for the sea water pump and the cold water pump.

NOTE

The entire air conditioning system must be protected by an external circuit breaker.

The sea water pump and the cold water pump are connected to the VX pump control box and should also be protected separately.

7.1.1 Minimum wire cross-sections

Minimum wire cross-sections must be taken into account. Information on determining the minimum wire cross-sections for each device in the BlueCool VX-Series can be found in chapter 13, "Technical Data" on page 26.

NOTE

Earth conductors are not specified.

Pay attention to the following requirements:

- Line length
- Power consumption
- Maximum temperatures in the vicinity of the cables

7.1.2 Installing line fuse protection

1. Line fuse protection must be selected corresponding to the data in Line fuses. The fuses must also be selected in accordance with the national and local standards.
2. Fuses of class gG for IEC and UL-type T with a tripping time of less than 0.5 s are generally required; if a magnetic circuit breaker (MCB) is used the MCB must be at least of type B, as specified in the data in Wiring diagrams.
3. Make sure that the voltage, frequency and number of phases match the data of the type used.
4. You may choose any desired installation position for the junction box.
5. Install the electrical box. Make sure that the fastening screws are accessible for opening and removal.

7.1.3 Earth leakage circuit breaker

As with all inverter devices, fault currents greater than 3.5 mA can occur. The drive is designed to produce the lowest possible leakage currents.

The following conditions apply to the residual current device (RCD) to be used:

- It must be a type B circuit breaker that is suitable for protecting systems with an inverter against leakage current.

7.2 Connecting the chiller unit

NOTE

Always refer to the wiring diagrams (see chapter 14.3, "Wiring diagrams" on page 33).

The BlueCool VX-Series chiller unit is already pre-installed internally.

7.2.1 Connection to the power supply

If operating several chiller units together, these must be individually connected to the power supply and individually protected.

7.2.2 Bus system cable connection

In order to create an integrated network, the individual VX units are connected with a typical 8-pin cable with RJ45 connector at the front such as network cables.

The connecting cable ensures communication takes place between the systems as well as with the VX pump control box.

7.3 Installing the BlueCool MyTouch control unit

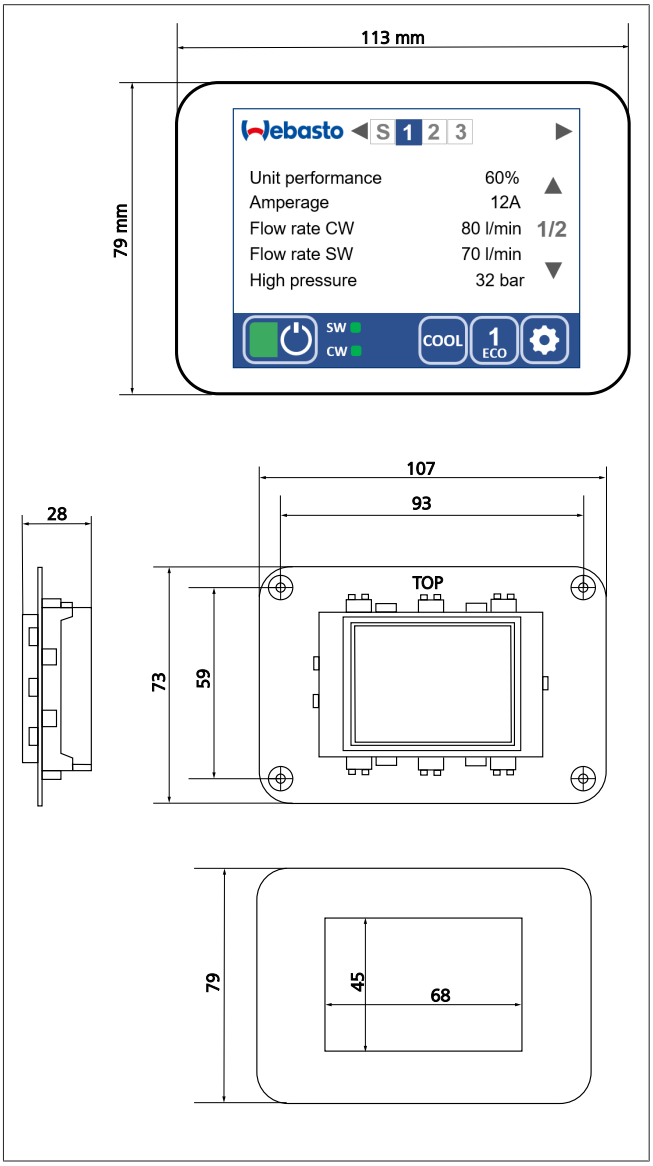

Fig. 14 Installing the BlueCool MyTouch control unit

The MyTouch control unit is originally installed on the front of the chiller unit.

Alternatively, the control unit can also be installed outside the chiller unit.

1. Use a Webasto control element cable or a commercially available 8-pin cable with RJ45 connector (power cable).
2. Route the display cable through the cable lead-through on the front of the VX.
3. Plug the connection cable connector for the control element into the back of the control panel.
4. Connect the control element connection cable to the control board from the inside.
5. Secure the control element with screws.
6. Fit the trim cover.

7.4 Accessories

7.4.1 BlueCool Expert Tool

The BlueCool Expert tool enables you to configure, actuate and diagnose the BlueCool VX-Series. Please refer to the corresponding documentation for additional information. Authorized users can download the tool free of charge from the Webasto dealer portal at: http://dealers.webasto.com

8 Operation

8.1 Description

The BlueCool MyTouch control element for the BlueCool VX-Series enables you to control and configure the connected system. The display doubles up as a touch screen. Instructions are included in this document.

ATTENTION

Damage to BlueCool MyTouch

The display must not come in contact with any other electrical devices. The electrostatic discharge could cause malfunctions.

Do not use pointed or sharp objects to operate the screen. Do not exert excessive pressure.

NOTE

Webasto recommends operating the screen using your fingers only. The touch sensitivity of the screen is optimized to fingertip contact. The screen may not respond if gloves are worn.

Tapping at the very edge of the screen may not be recognized.

8.2 Home screen and icons

Black and white are available as background colours for the home screen. The functions are the same.

To change the background colour, see chapter 8.4, "Settings menu" on page 16.

The symbols on the Home screen provide information on the system status. The symbols are explained in the table below:

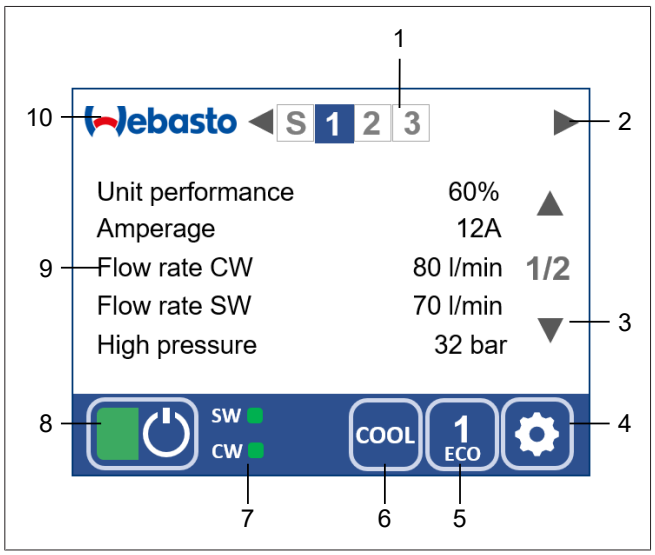

Fig. 15 Home screen

1	VX unit (system, 1, 2, 3, ...)	2	Screen change (system, unit 1, unit 2, unit 3, ...)
3	Page selection (page 1, page 2)	4	Setting level 1
5	ECO mode (On, 1, 2, 3)	6	Operating mode (Cool, Heat, Heat Aux)
7	Status of sea water, cold water pump	8	System status (On / Off)
9	Text display with 5 parameters	10	Setting level 2

8.2.1 Standby

The screen will go to Standby mode after 5 minutes if the screen remains untouched and will show an idle screen that can be selected in the settings. Tap anywhere on the screen to call up the Home screen.

8.2.2 Notification

The notification icon appears on the bottom status line to draw your attention to the current status of the system. Tap the icon to show the current status.

8.2.3 ON/OFF

When the screen is off:

- Tap the screen
  - The screen switches on.

When the screen is on:

- Tap the green / grey field
  - The color of the ON/OFF symbol indicates the operating status of the BlueCool (green = switched on).

8.2.4 Operation

After switching on, the control system starts up all VX units within the system in steps in the selected operating mode.

The colour of the lower screen bar shows the operating mode. It is:

- Blue in cooling mode.
- Red in heating mode.

8.2.5 Select operating mode

The **Operating Mode** button (6) is used to set the operating mode.

The options are:

- COOL (cooling mode)
- HEAT (heating mode)
- HEAT AUX (Heating mode combined with an external heater)

NOTE

If a different operating mode is selected when the unit is in operation, then the whole system initially shuts down, then restarts in the new operating mode. Depending on the operating state, this process may last several minutes.

8.2.6 Select ECO mode

The **ECO mode** button (5) activates energy-saving mode. Power consumption of all connected systems is limited. 3 different ECO modes are available.

The options are:

- ECO Off (100% rated power)
- ECO 1 (approx. 75% of the rated output, 70% of the power consumption)
- ECO 2 (approx. 60% of the rated output, 50% of the power consumption)
- ECO 3 (approx. 45% of the rated output, 33% of the power consumption)

8.2.7 Home screen display

The VX unit typically shows the operating parameters of the connected system. If several VX units are used in an integrated network then information from additional connected VX units can also be displayed.

Use the arrow keys in the upper status line (Fig. 16, item 2) to change the display.

The number of the VX unit to which the MyTouch display is connected is shown in the upper status line in blue. If there is a change to the display on another VX unit, the blue display changes to the number of the relevant system. The system that is connected to the MyTouch display is then shown framed in blue.

NOTE

If a black background is selected, then the number of the connected VX unit is framed in white. The number of the home screen on another displayed VX unit is shown, filled in, in white.

Pump status

The operating status of the sea water pump (SW) and the cold water pump (CW) is shown in the display bar at the bottom of the screen.

- Green = No actions required.
- Yellow = Flow may be insufficient, please check.
- Red = The flow is insufficient to ensure full cooling capacity is generated. Immediate checking is required. (See also chapter 10.1, "Sea water circuit " on page 19 and chapter 10.2, "Cold water circuit" on page 20)

System display

In addition to the operating parameters of individual VX units, the S system display can also be accessed. This shows system-relevant parameters that apply to all connected VX units.

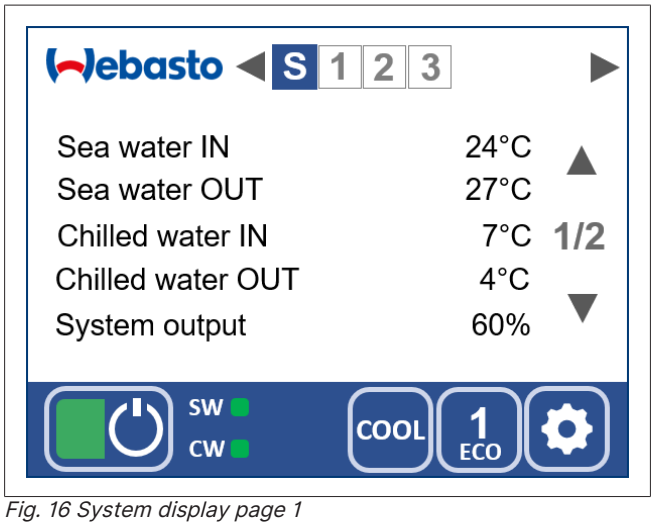

Fig. 16 System display page 1

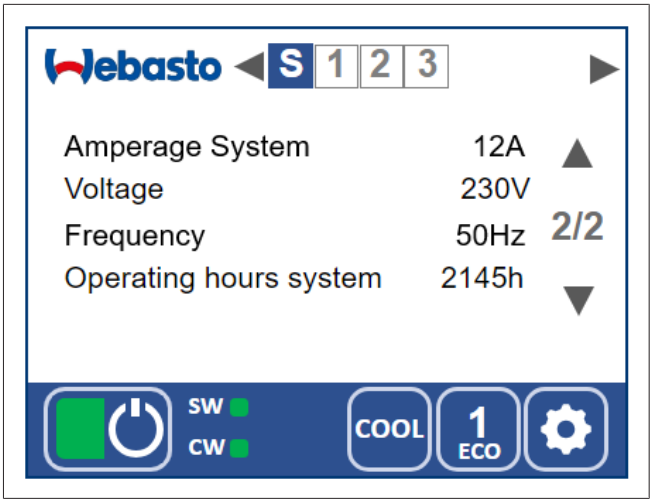

Fig. 17 System display page 2

Idle screen

Individual parameters can also be constantly displayed in an idle screen. These can be selected in the Settings menu.

Further information can be found in chapter 8.4.4, "Standby" on page 16.

8.3 Settings

The operating logic is explained based on the Brightness function. The explanation also applies to other functions.

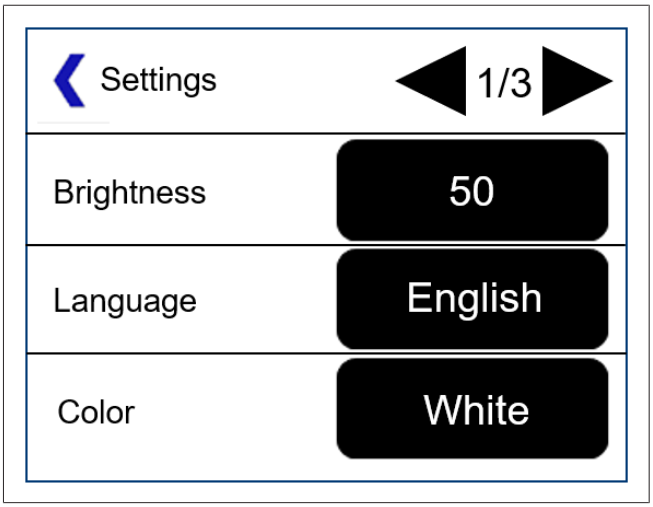

Fig. 18 Settings menu

To call up settings:

1. Tap the Settings symbol.
   – The Settings menu opens up.
2. Tap (symbol: ◀) or (symbol: ▶) to scroll between the various pages.
3. Tap on brightness. The setting window for this function opens up.

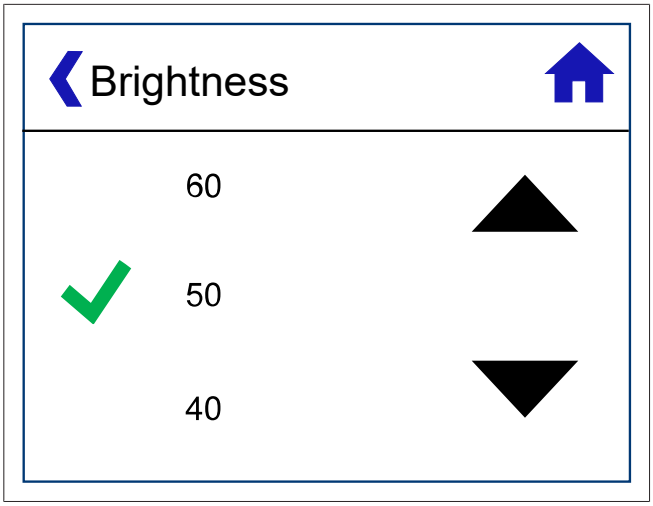

Fig. 19 Set the brightness

4. Tap the ▲ symbol to reduce the brightness or the ▼ symbol to increase it.
   – The ✓ symbol marks the current selection.
5. Tap on the required brightness to set it.
6. Tap the Previous (symbol: ❮) symbol to go to the previous level.
   – The selected settings are then adopted.
7. Tap the Home screen (symbol: ⌂) symbol to return to the Home screen.
   – The selected settings are then adopted.

8.4 Settings menu

You can access the Settings menu by tapping the Settings icon from the home screen.
The Settings menu opens up. The available functions are:

8.4.1 Brightness

Adapts the screen brightness to the ambient light levels.

8.4.2 Language

Sets the operating language.

8.4.3 Colour

Adapts the background colour.

8.4.4 Standby

Sets the BlueCool MyTouch display to Standby mode.
In Standby mode, the available functions are:

- **Webasto logo**
  – Shows the Webasto logo.
- **Customer logo**
  – Shows an individual file in .BMP (bitmap) format, that you can load onto the BlueCool MyTouch using the BlueCool Expert tool.
- **Standby off**
  – The Home screen remains active.
- **System: cold water in, cold water out**
  – Cold water temperatures of the system are displayed.
- **System: sea water in, sea water out**
  – Sea water temperatures of the system are displayed.
- **System: current consumption and output in %**
  – Current consumption and cooling capacity of the system are displayed.
- **System: mains voltage**
  – System voltage is displayed.
- **System: supply frequency**
  – Supply frequency is displayed.
- **System: operating hours**
  – Operating hours of the system are displayed.
- **System: status**
  – System status is displayed.
- **Unit: sea water and cold water flow**
  – The flow rates of the sea water and cold water connections are displayed on the unit.
- **Unit: current consumption and output**
  – The power consumption and cooling capacity of the unit are displayed.
- **Unit: high and low pressure**
  – Refrigerant pressure of the refrigerant circuit is displayed.
- **Unit: status**
  – Status of the unit is displayed.

8.4.5 Key tone

Sets whether the control element makes a sound when you touch the screen surface.

8.4.6 °C / °F

Sets the temperature display in degrees Celsius (°C) or degrees Fahrenheit (°F).

8.4.7 Cleaning

Disables the touch screen functions for 30 seconds to enable you to clean the surface without inadvertently changing the settings.

8.5 Setting level 2 (Crew menu)

NOTE
Access to setting level 2 (Crew menu) is purposefully not intuitive as it contains access to the parameters menu. This contains setting options that are intended only for authorised persons (crew).

To access setting level 2, tap and hold the Webasto logo.
This provides access to the following functions:

8.5.1 Firmware

Display of current firmware version.

8.5.2 Screen settings

- **Save**
  – Saves the current screen settings.
- **Reset**
  – Resets the screen settings to the status last saved.

8.5.3 System settings

To access setting level 3 (Parameter menu) you must enter an access code. (Default: 64).

8.5.4 Fault protocol

- **Event counter**
  – Shows the total number of events
- **Fault code**
  – Shows the fault code
- **Fault counter**
  – Shows the number of faults
- **Operating time**
  – Shows the operating time in hours

8.5.5 Firmware

- **Firmware**
  – Display of current firmware version

8.6 Setting level 3 (Parameter menu)

To access setting level 3, tap and hold the Webasto logo. Then select System settings from the menu and enter your access code (default: 64).

This provides access to the following functions:

8.6.1 Relay functions

Setting the relay functions for relay 1 and relay 2. Relay 3 is only available if the "Chiller unit number" parameter is set to the "16 for V-PRO system card" value range in the master control box or the remote connection box.

Selection:

- **External heater**
- **Alarm indicator**
  - Relay switches with fault code
- **Load shedding**
  - Other electrical loads are switched off for a defined period during compressor start-up.
- **Valve heater**
  - Switches the 3-way valve for integration of an external heater
- **Heating indicator**
- **Operating indicator**

8.6.2 Compressor switching points

Setting the temperature switching points for the compressor.

Selection:

- **Switch-off temperature cooling:**
  - target value for the cold water temperature in cooling mode, at which the compressor should switch off.
- **Switch-off temperature heating:**
  - target value for the cold water temperature in heating mode, at which the compressor should switch off.
- **Target temperature for cooling:**
  - Target value for the cold water temperature in cooling mode
- **Target temperature for heating:**
  - Target value for the cold water temperature in heating mode

8.6.3 Further settings

- **Access code:**
  - Sets the access code for setting level 3.
    00 = entry of access code not necessary
    01 to 99:= Access code activated
- **Undervoltage switch-off:**
  - Sets the undervoltage value for a supply voltage of 400 V. If the supply voltage falls below the undervoltage threshold for more than 5 seconds, the system will shut down.
- **CAN-bus address:**
  - CAN-bus address selection for the chiller unit.
- **Factory setting:**
  - Resets all parameters to factory setting.
- **Terminating resistor:**
  - The first and last physical system that is connected to the system bus must be set to "On". This also applies to the PC board in the master control box or the remote connection box. The terminating resistor must also be set to "On" there.
- **Calibration of flow measurement:**
  - Cold water inlet sensor
  - Cold water outlet sensor
  - Sea water inlet sensor
  - Sea water outlet sensor

(Pay attention to chapter 9.4.1, "Calibration of water temperature sensors" on page 19 when calibrating the water temperature sensors.)

8.6.4 Logic signal input

Select logic signal input

Select components that are connected to the VX pc-board via the "Additional On/Off Push Button" connection.

- **Deactivated:**
  - Input not activated. Connected components have no function.
- **Push button:**
  - Push button is used.
- **Switch:**
  - Switch is used.
- **Operating mode switch:**
  - Operating mode switch (off, cooling, heating) is used.
- **Emergency stop switch:**

Pushbutton and emergency stop switch

  - The push button and additional emergency stop switch are used.

Operating mode and emergency stop switch

  - Operating mode and additional emergency stop switch are used.

8.6.5 Deactivation of chiller unit

- **Chiller unit 1:**
  - ON, OFF
- **Chiller unit 2:**
  - ON, OFF
- **Chiller unit 3:**
  - ON, OFF
- **Chiller unit 4:**
  - ON, OFF
- **Chiller unit 5:**
  - ON, OFF
- **Chiller unit 6:**
  - ON, OFF

8.6.6 Unit number

Select the number of the connected unit (1-6) or system control unit (16) in an external electrical box.

9 Commissioning

9.1 Check connections

Check all connections:

- Check that the chiller unit is securely mounted.
- Check the electrical connections for firm seating.
- Check that the sea water piping is firmly mounted and not leaking.
- Check that the cold water lines are firmly fitted and not leaking.

9.2 Filling sea water pump head

- **Self-priming sea water pumps:**
  - Fill pump head with water.

9.3 Filling cold water circuit

9.3.1 Filling and flushing an open cold water circuit

The cold water circuit can be filled with a water/glycol mixture using the following procedure. Carry out each step in the specified order:

1. Fit a filler connection to the intake side of the cold water pump.

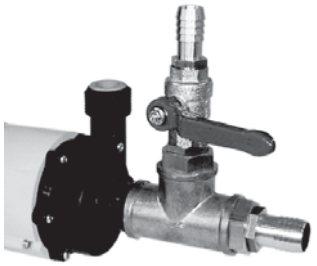

Fig. 20 Filler connection

NOTE

The filler connection must be suitable for temporary connection of a filling hose with an inside diameter of at least 15 mm.

The filler opening must point upwards.

Fit a shut-off valve to be able to quickly shut off the access point on completion of this procedure.

2. Fit a reservoir with a prepared water/glycol mixture such that it forms the highest point in the circuit and the tube leading from the filler connection (access point) to the reservoir is constantly rising.

NOTE

Use a transparent tube from the filler connection to the reservoir; no air bubbles should be present.

3. Open vent on the unit.
4. Open the proportional valve manually or with the Expert Tool.
5. Using the function in MyTouch to enable flow through the heat exchanger.
6. Fill the reservoir with the pre-treated water/glycol mixture.
7. Open the filler connection and fill the circuit with the water/glycol mixture.

NOTE

Observe the vents at the chiller unit. Close all vents as soon as bubble-free liquid flows out.

It will not be necessary to bleed the chiller unit again later.

Top up the water/glycol mixture in the reservoir as required to make sure that it never runs empty.

8. Connect the power supply to the cold water pump and to the electrical box to enable manual switching on and off of the cold water pump.

NOTE

The easiest way to do this is by using the Webasto BlueCool Expert Tool. You can download this tool from the Webasto dealer portal. The tool enables you to activate the pump relay from a laptop or similar handheld device. To do so, the reservoir must be at least half full at this point.

Run the cold-water pump for approximately 15 seconds and then switch it off again. Large air bubbles can be seen to rise in the filler hose. Repeat this procedure until the air bubbles are small enough to run the pump continuously without cavitation.

9. Run the pump for at least 45 minutes without interruption.

NOTE

An uninterrupted flow of small bubbles drifts upwards and a clear liquid flows downward.

10. Flush the circuit by closing the shut-off valves at the air handlers or the fresh air unit such that the flow of liquid is routed through the other one.

NOTE

This will flush out all remaining air that may have collected in the form of air inclusions in one of the air handlers or the fresh air unit.

11. Stop the cold water pump when there are no more air bubbles in the system.
12. Close the shut-off valve at the filler connection and disconnect the filler reservoir.

9.3.2 Filling and flushing a closed system

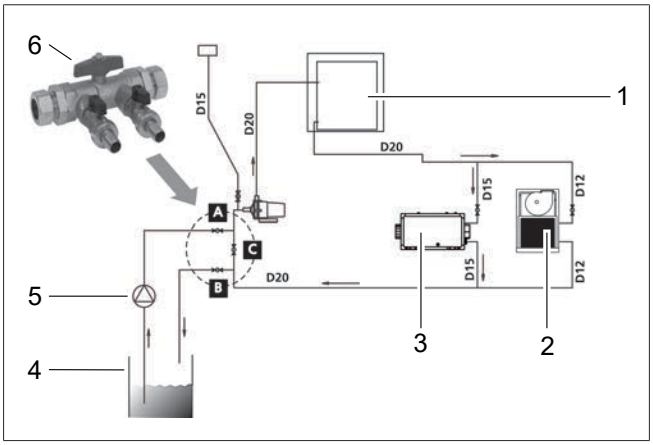

Fig. 21 Filling and flushing a pressurised cold water circuit

1	Chiller
2	Air handler
3	Fresh air unit
4	Water/Glycol mixture tank
5	Self-priming pump
6	Filler valve (with 3 shut-off valves A, B, C)

To fill and bleed a pressurised cold water circuit fit a special filler valve (6) in the cold water circuit or alternatively install three shutoff valves (A, B, C). This will achieve the same effect.

Use a filler station, consisting of:

- Water/glycol mixture tank,
- Self-priming filler pump (impeller pump),
- Two (transparent) water hoses.

Connect these components to filler valve (6).

Proceed as follows to fill and bleed the system:

1. Fill the tank of the filler station with a known quantity of water (e.g. volume of entire system plus 50%).

NOTE
Do not add any water/glycol mixture at this point, because if there is a leak this will make the boat dirty.

2. Connect the filler station to the filler valve (6), shut-off valves A and B.
3. Filler valve (6): close C and open A and B.
4. Start the filler pump and fill the entire cold water circuit with water until clear water without bubbles flow back into the tank.

NOTE
Pay attention to the liquid level in the tank (not too low).

5. Bleed all air handlers and the fresh air unit, one after the other.

NOTE
Leave the filler pump running.

6. Check the entire cold water circuit for leaks. Repair any leaks.
7. Add glycol to the tank.

NOTE
In terms of quantity, add sufficient glycol to achieve a water/glycol mix ratio of 25 to 40% glycol.

8. Leave the filler pump running.
9. Close shut-off valve A and B at filler valve (6).
10. First close shut-off valve B and wait until the required pressure is built up.
11. Stop the filler pump.
12. Disconnect the filler station from the cold water circuit.
13. Open shut-off valve C at filler valve (6).
14. The system is completely filled and bled and can now be started.

9.4 Test run

1. Connect the power supply as shown in the wiring diagram.
2. Switch on the generator.
3. Switch on the air-conditioning system in the cooling mode. See chapter 8, "Operation" on page 14.

9.4.1 Calibration of water temperature sensors

The temperature sensors must be calibrated in pairs to ensure correct calculation of the flow rate of sea water and cold water.

In this case, the measurement values are read off when the compressor is switched off and when the sea water and cold water pumps are switched on. Wait until the temperature values no longer change. If a difference can be detected between the cold water inlet and the cold water outlet then half the difference must be set for calibration.

Example:

Temperature value of cold water inlet: 20 °C
Temperature value of cold water outlet: 21.6 °C
difference: 1.6 °C / 2 = 0.8

Value for calibration of the cold water inlet: + 0.8 °C
Value for calibration of the cold water outlet: - 0.8 °C

NOTE
Repeat calibration in the same way with the sea water temperature sensors.

9.4.2 Check the sea water flow rate

The flow rate status for the sea water and cold water is shown on the display using colour:

- **red:** Flow rate far too low
- **yellow:** Flow rate too low
- **green:** Flow rate is sufficient

NOTE
The actual flow rate must be above the required minimum flow rate (see Technical Data) to ensure fault-free operation at high sea water temperatures.

If the minimum value is not reached, the pressure losses in the sea water system should be reduced using the following measures:

- Use larger cross-sections
- Install fewer bends
- Install shorter lines

Alternatively, use a more powerful sea water pump.

9.4.3 Check the flow rate of the cold-water circuit

If the cold water flow rate is sufficient, it is shown in colour on the display:

- **red:** Flow rate far too low
- **yellow:** Flow rate too low
- **green:** Flow rate is sufficient

If the minimum value is not reached, there may still be air bubbles in the cold water circuit.

– Bleed the system completely.

If the cold water flow rate is still too low, the pressure losses in the cold water circuit should be reduced using the following measures:

- Use larger cross-sections.
- Install fewer bends.
- Install larger water manifolds.
- Install shorter lines.

Alternatively, use a more powerful cold water pump.

9.4.4 Hydraulic balancing of the the cold water and sea water circuit

NOTE
Hydraulic balancing can take place via the ball valves.

10 Inspection and Maintenance

We recommend performing a series of routine checks at regular intervals to ensure the system functions long-term and retains its capacity.

At least once a month, the function of the air conditioning system must be checked. To do this, the system must be switched on and must run for at least 10 minutes.

10.1 Sea water circuit

The operation of the sea water circuit must always be checked, especially after a longer absence.

- Check immediately after each switch-on of the air-conditioning system whether sea water flows out of the sea water outlet. The minimum flow rates should be complied with.

- Immediately switch off the air-conditioning system if no sea water flows out after the compressor starts up.
- Check the sea water strainer for contaminants at least once a week. Clean if necessary.
- At least once a month, check the entire sea water circuit from the through-hull fitting to the sea water outlet for leaks.
- Once a year, the sea water circuit including the condenser of the chiller unit should be cleaned. The time interval depends on the degree of biological fouling (by shellfish etc.).
- Soiling of the sea water circuit reduces the sea water flow rate, which decreases the heat dissipation and can result in reduced performance and high-pressure switch-offs. A sea water flow that is too low is shown in colour on the display.
- If the condenser is soiled, the cooling or heating capacity of the system decreases.
- The sea water circuit must only be cleaned by an expert (installer or Webasto Service Centre).

10.2 Cold water circuit

The operation of the cold water circuit must always be checked, especially after prolonged absence.

- In open systems, check the liquid level in the expansion tank at least once a month, and top up with water/glycol mixture if necessary.
- In closed systems, check the static prepressure in the system at least once a month. In the event of a pressure drop, repair leaks and top up with water/glycol mixture.
- Check the entire cold water circuit for leaks at least once a month; from the chiller unit through the cold water pump to the air handlers and, if necessary, the fresh air unit as well.
- At least once a year manually bleed the system. To do so, open the bleeder valves at the air handlers and bleed off air until bubble-free liquid flows out.
- Check the water/glycol mixture for adequate mixing ratio (25 % to max. 40 % glycol) at least once a year and rectify if necessary.

10.3 Electrical wiring

At least once a year, the electrical connections must be checked for corrosion of the contacts and firm seating. Also check the mechanical strain relief of the lines.

CAUTION

Danger of water damage to installations, equipment.

Condensation collects on the inside of the housing when the housing is left open. The condensation can leak out and damage adjacent components and cause corrosion.

The housing of the VX series chiller must be shut tight during operation and the condensation must be drained out at a suitable point via the condensate outlet (e.g. bilge).

10.4 Checklist for inspection and maintenance

1. Cold water circuit. See chapter 6.7, "Cold water circuit" on page 10.
   - **Open system**: Check liquid level in expansion tank and correct if necessary.
   - **Closed system**: Check static prepressure. In the event of a pressure drop, repair leaks.
   - Check the entire cold water circuit for leaks.
   - Manually bleed cold water circuit.
   - Check mix ratio of water/glycol mixture.
2. Check the electrical connections for corrosion to the contacts and firm seating. See chapter 7, "Electrical Wiring" on page 12.
3. Check the shaft seal of the pumps (cold water) and replace it if necessary (does not apply to pump with magnetic coupling).
4. With the system switched off, check cleanliness of the electrical box. If necessary, use compressed air to remove dust or similar.

10.5 Repairing the Refrigerant Circuit

WARNING

Danger of explosions

Use suitable suction devices, refrigerant hoses, and recycling bottles.

1. Use suitable suction devices to extract the refrigerant.
2. Check the connections for leaks before extracting.
3. Transfer the extracted refrigerant into a suitable disposable bottle.
4. Do not mix the refrigerant with other refrigerants.
5. Do not overfill the disposable bottle.
6. Rinse out the system with air or nitrogen.
7. Ventilate the room well. We recommend forced ventilation.
8. Keep a fire extinguisher ready and wear personal protective equipment.

WARNING

Danger of explosions

Fully ventilate the engine room before starting with the work. Remove the refrigerant and the recycling bottle from the work area.

Observe the following steps before refilling the system:

1. Check the cold circuit and all connections for leaks. It is important to ensure there are no leaks to guarantee efficient system operation.
2. Avoid overfilling refrigeration system. Add the correct quantity of refrigerant to ensure optimum performance.
3. Carefully attach and release the filling hoses. Handle the hoses with care when connecting and disconnecting them to prevent damage.

Before starting the system:

1. Remove the refrigerant and the recycling bottle from the work area. Make sure there is no remaining refrigerant in the work area to ensure safety.
2. Ventilate the room well. We recommend forced ventilation.

WARNING

Danger of explosions

After completing work on the refrigerant circuit, check it for leaks.

11 Decommissioning

If the air conditioning system is to be decommissioned, for example during winter, you must proceed as follows:

1. Switch off the system with BlueCool MyTouch.
2. Disconnect the power supply.

3. Completely empty sea water circuit, i.e. sea water lines, sea water strainer, sea water pump and condenser or fill with antifreeze.
4. Check adequate mix ratio of water/glycol mixture in the cold water circuit and correct if necessary.

12 Malfunctions

12.1 Troubleshooting

ATTENTION

Troubleshooting is restricted to professionals

Troubleshooting requires comprehensive knowledge on the design and operation of the individual components of the air-conditioning system and may only be carried out by authorized professionals trained by Webasto for this purpose.

NOTE

Only use genuine Webasto spare parts to ensure fault-free operation of the air-conditioning system.

If faults occur, the system must be switched off immediately.

12.2 Faults that are displayed

The BlueCool VX-Series can display malfunctions in the following ways:

- On the BlueCool MyTouch screen, in the form of a code (e.g. E101) and a text message.

Every time a fault code occurs, the unit stops for approx. 60 seconds and then attempts to restart. If the same malfunction occurs more than six times consecutively within 30 minutes, then the system is completely shut down and a fault code is displayed continuously. No further restarts are attempted. The BlueCool VX-Series can only be reset after the cause of the error has been eliminated.

To reset the BlueCool VX-Series, switch the VX-Series off and on via BlueCool MyTouch. Alternatively you can disconnect and reconnect the power supply to reset theBlueCool VX-Series .

12.3 LED display on the BlueCool VX-Series PC Board

- **LED 12 V**
  - This LED lights up as soon as the +12 V supply is connected.
- **LED 3.3 V**
  - This LED lights up as soon as the +3.3 V supply is connected.
- **LED “Alive”**
  - This LED lights up as soon as the 230 V supply is connected and the pc-board is ready for operation.

12.3.1 Status / Error message table

	Status / Error message	Possible cause	Correction
1	E100 - Undervoltage	Switch-off in case of undervoltage. Power supply below set undervoltage value for longer than 5 seconds. Cause is probably excessively long cable, overloading or an insufficiently high power generator output.	Check setting (default setting: 195 V between the phase and neutral conductor). Do not set below 195 V to prevent damage to the compressor and subsequently voiding of the warranty. Ensure a better power supply.
2	E101 – Low pressure compressor	Incorrect pressure sensor measurement	Check plausibility of pressure sensor measured value and replace sensor if necessary.
		Compressor switches off in heating mode: sea water flow rate too low or sea water too cold (temperature below 6 °C). Sea water strainer blocked or no intake.	Check the flow rate of the sea water circuit at the sea water outlet. Difference between condenser inlet/outlet temperature approx. 5 K. At sea water temperature <6 °C: Heating not possible in reverse heating operation. Clean sea water strainer and bleed sea water circuit.
		Compressor switches off in cooling mode: cold water flow rate too low.	Check cold water flow rate and if necessary, increase by changing system layout. Difference between inlet/outlet temperature approx. 5 K.
		Refrigerant shortage	Check whether refrigerant is leaking.
		Refrigerant circuit blocked	Operate chiller unit for 5 minutes in heating or cooling mode (if possible), then change over operating mode. Switch chiller unit back on and check whether the fault occurs again.
3	E102 – High pressure compressor	Pressure switch defective or power circuit interruption/short circuit.	Check electrical wiring. Replace pressure switch on Schrader valve.
		HEATING MODE: Cold water flow rate too low.	Check cold water flow rate and if necessary, increase by changing system layout. Difference between evaporator inlet/outlet temperature approx. 5 K.
		COOLING MODE: - Sea water flow rate insufficient or sea water too cold (Temperature below 6 °C). - Sea water strainer blocked or no intake.	Check the flow rate of the sea water circuit at the sea water outlet. Difference between condenser inlet/outlet temperature approx. 5 K. At sea water temperature <6 °C: Heating not possible in reverse heating operation. Clean sea water strainer and bleed sea water circuit.
4	E103 – High pressure compressor	Incorrect pressure sensor measurement	Check plausibility of pressure sensor measured value and replace sensor if necessary.
		Compressor switches off in cooling mode, maximum pressure reached. Insufficient sea water cooling. Sea water strainer soiled or no flow. Sea water pump defective. Refrigerant circuit blocked.	Check sea water flow rate at sea water outlet. The minimum flow rate must be maintained. Clean sea water strainer and bleed sea water circuit. Check cold water flow rate and if necessary, increase by changing system layout. Difference between evaporator inlet/outlet temperature approx. 5 K. Operate chiller unit for 5 minutes in heating mode (if possible) then switch to cooling mode and check whether the fault occurs again.

	Status / Error message	Possible cause	Correction
		Compressor switches off in heating mode, maximum pressure reached. Cold water pump defective. Plate heat exchanger or cold water circuit blocked. Refrigerant circuit blocked.	Check cold water flow rate and if necessary, increase by changing system layout. Difference between evaporator inlet/outlet temperature approx. 5 K. Operate chiller unit for 5 minutes in cooling mode (if possible) then switch to heating mode and check whether the fault occurs again.
5	E111 - High pressure sensor	Pressure sensor defective or power circuit interruption/short circuit.	Check electrical wiring. Replace pressure sensor on Schrader valve.
6	E112 - Low pressure sensor	Pressure sensor defective or power circuit interruption/short circuit.	Check electrical wiring. Replace pressure sensor on Schrader valve.
7	E123 - Excess temperature compressor	Incorrect temperature measurement	Check plausibility of compressor temperature sensor measured value and replace sensor if necessary.
		Compressor shut-down in cooling mode, maximum compressor temperature reached. Insufficient sea water cooling. Sea water strainer soiled or no flow. Sea water pump defective. Refrigerant circuit blocked.	Check sea water flow rate at sea water outlet. The minimum flow rate must be maintained. Clean sea water strainer and bleed sea water circuit. Check cold water flow rate and if necessary, increase by changing system layout. Difference between evaporator inlet/outlet temperature approx. 5 K. Operate chiller unit for 5 minutes in heating mode (if possible) then switch to cooling mode and check whether the fault occurs again.
8	E131 - Characteristic diagram	Due to external operating parameters, such as the cold water temperature, the compressor functions at an operating point for which it is not ideally designed. The compressor automatically restarts until an ideal operating point is reached.	Typical system behaviour. It is important that the compressor functions within its characteristic map to achieve optimal performance. Further corrective measures are only required if this error message appears over a prolonged period.
		Compressor operation outside characteristic map. Incorrect pressure sensor measurement.	Check plausibility of pressure sensor measured value and replace sensor if necessary.
		Compressor operates outside the characteristic diagram in cooling mode, maximum pressure reached. Insufficient sea water cooling. Sea water strainer soiled or no flow. Sea water pump defective; refrigerant circuit blocked.	Check sea water flow rate at sea water outlet. The minimum flow rate must be maintained. Clean sea water strainer and bleed sea water circuit. Check cold water flow rate and if necessary, increase by changing system layout. Difference between evaporator inlet/outlet temperature approx. 5 K. Operate chiller unit for 5 minutes in heating mode (if possible) then switch to cooling mode and check whether the fault occurs again.
		Compressor operates outside the characteristic diagram in heating mode, maximum pressure reached. Cold water pump defective. Plate heat exchanger or cold water circuit blocked. Refrigerant circuit blocked.	Check cold water flow rate and if necessary, increase by changing system layout. Difference between evaporator inlet/outlet temperature approx. 5 K. Operate chiller unit for 5 minutes in cooling mode (if possible) then switch to heating mode and check whether the fault occurs again.
9	E201 - Cold water temperature sensor outlet	Cold water temperature sensor defective or break/short-circuit in electrical circuit.	Check electrical wiring or replace sensor.

	Status / Error message	Possible cause	Correction
10	E202 - Cold water temperature sensor inlet	Cold water temperature sensor defective or break/short-circuit in electrical circuit.	Check electrical wiring or replace sensor.
11	E211 - Sea water temperature sensor outlet	Sea water temperature sensor defective or power circuit interruption/ short circuit.	Check electrical wiring or replace sensor.
12	E212 - Sea water temperature sensor inlet	Sea water temperature sensor defective or power circuit interruption/ short circuit.	Check electrical wiring or replace sensor.
13	E231 - Compressor temperature sensor I	Compressor temperature sensor defective or break/short-circuit in electrical circuit.	Check electrical wiring. Replace compressor temperature sensor.
14	E232 - Compressor temperature sensor II	Compressor temperature sensor defective or break/short-circuit in electrical circuit.	Check electrical wiring. Replace compressor temperature sensor.
15	E300 - Data communication	Initialisation procedure or system blocked. Electrical wiring defective, interruption in power circuit/short circuit.	Check cables and connections of pc-board and of control element. Replace defective cable, control element or pc-board.
16	E301 - Data communication inverter	No data communication between inverter and pc-board.	Check serial connection.
17	E302 - Error on inverter PCB	Internal inverter fault	System fault. Replace the inverter.
18	E303 - Data communication	System bus data transmission fault.	Switch off the chiller unit and then reconnect the power supply.
19	E304 - Data communication	Repeated assignment of a system bus address to various chiller units.	Check and correct the address assignment of all chiller units.
20	E305 - Permitted sea water temperature exceeded	Sea water flow rate insufficient or sea water too warm (Temperature over 40 °C).	Check sea water flow rate at MyTouch control unit. The minimum flow rate must be maintained. Clean sea water strainer and bleed sea water circuit.
21	E311 - Unit type not detected	Compressor detection is faulty or power circuit interruption/short circuit.	Check electrical wiring on the compressor detection harness or replace the compressor detection harness.
22	E321 - Inverter excess current	Excess current caused by undervoltage. Insufficient power supply. Cause is probably excessively long cable, overloading or an insufficiently high power generator output.	Improve power supply or activate ECO mode.
23	E322 - Inverter excess current	Current too high due to sudden changes in load, short-circuit in motor line, incorrect parameter settings.	Check the connection wiring of the motor, the connection at the inverter terminal, at the compressor terminal and check the earthing lines at the compressor.
24	E323 - Inverter excess current	HW excess current. Current too high due to sudden changes in load, short-circuit in compressor connection line, incorrect inverter parameter settings.	Check the connection wiring of the motor, the connection at the inverter terminal, at the compressor terminal and check the earthing lines at the compressor.
25	E324 - Frequency converter excess current	Excess current has occurred in the inverter. Current is excessive due to sudden load changes, short circuit in the compressor connection cable, incorrect parameters on the inverter Settings.	Check the electric wiring, check the compressor detection harness, check the manifold for open valves. Check operation of pumps.
26	E325 - Earth leakage current	Earth fault found. Earth current too high.	Check the connection wiring of the motor, the connection at the inverter terminal, at the compressor terminal and check the earthing lines at the compressor.

	Status / Error message	Possible cause	Correction
27	E-331 - Excess temperature inverter	Ambient temperature too high or insufficient cooling.	Check whether the air vents in the electrical box are blocked. Remove dust deposits from the heat sink. The max. ambient temperature must not exceed 60 °C.
28	E332 - Excess temperature inverter	The permissible temperature in the inverter housing is exceeded.	Check whether the air vents in the electrical box are blocked. Remove dust deposits from the heat sink. If possible, reduce the max. ambient temperature to below 60 °C.
29	E333 - Thermistor inverter	Internal inverter thermistor fault	System fault. Replace the inverter.
30	E341 - Phase connection to compressor	Compressor, phase connection. Break in compressor connection cable.	Check the connection wiring of the motor, the connection at the inverter terminal, at the compressor terminal and check the earthing lines at the compressor.
31	E342 - Missing phase in inlet	Power supply of a phase is faulty. Uneven load on a phase due to other users.	Check electrical wiring, on-shore connection or generator. Measurement of all 3 phases.
32	E343 - Compressor not connected	Compressor defective or power circuit interruption.	Check the connection wiring of the motor, the connection at the inverter terminal, at the compressor terminal and check the earthing lines at the compressor. Replace the compressor.
33	E351 - Undervoltage inverter	Undervoltage due to low supply voltage or defective inverter.	Check the system connection cable and the cable cross section from the system connection to the connection terminal. Check the connection at the inverter.
34	E352 - Overvoltage	The DC voltage of the intermediate circuit has exceeded the maximum permissible value as the result of excessively long delay or overvoltage peaks in the supply voltage.	System fault. Contact Webasto Customer Service.
35	E353 - Power supply is not normal	The power supply is faulty.	Check electrical wiring, on-shore connection or generator.
36	E361 - Compressor speed	Incorrect speed or incorrect parameters at too high a load.	Check the 4/2-way valve. Check the expansion valve.
37	E362 - Compressor overload	Maximum permissible current was exceeded within the defined time window.	System fault. Contact Webasto Customer Service.

Table 2: Status / Error message

13 Technical Data

Technical data VX 36M / VX 48M / VX 60M

Type	VX 36M		VX 48M		VX 60M	
Min. cooling capacity [kBTU/h] [kW](1)	3,4	1,0	6,9	2,0	5,9	1,7
Max. cooling capacity [kBTU/h] [kW](1)	36	10,6	48	14,1	60	17,6
Max. heating capacity [kBTU/h] [kW](1)	44,4	13,0	58,0	17,0	63,1	18,5
Rated voltage / phase [V/ph]	230 1-Ph		230 1-Ph		230 1-Ph	
Frequency [Hz]	50 - 60		60		50 - 60	
Current consumption, operation [A](2)	13,5		16		18,7	
Current consumption in Eco mode (Eco 1) [A]	10		11		13,5	
Current consumption in Eco mode (Eco 2) [A]	7		8		10,9	
Current consumption in Eco mode (Eco 3) [A]	4,3		5,2		7	
Current consumption during start [A]	3		3		4	
Max. current consumption peak [A]	15		17		21	
Power consumption cooling [kW]	3,1		3,7		4,3	
Current consumption heating [A]	13,5		16		18,7	
Power consumption heating [kW]	3,1		3,7		4,3	
Ø Cold water connection [mm] [inch]	IG 25	BSPP female 1"	IG 25	BSPP female 1"	IG 25	BSPP female 1"
Minimum cold water flow rate [l/min]	33		40		50	
Ø Sea water connection [mm] [inch]	IG 19	BSPP female 3/4"	IG 25	BSPP female 1"	IG 25	BSPP female 1"
Minimum sea-water flow rate [l/min]	40		55		65	
Max. permissible ambient temperature [°C] min. [°C] max.	0	55	0	55	0	55
Max. permissible ambient temperature with reduced performance [°C] min. [°C] max.	0	60	0	60	0	60
Min. sea water temperature in heating mode [°C]	5		5		5	
Max. sea water temperature in cooling mode [°C]	40		40		40	
Max. sea water temperature in cooling mode with reduced performance [°C]	45		45		45	
Weight [kg]	49		63		76	
Dimensions, see also chapter 13.1, "Dimensions and minimum distances" on page 28						
Dimensions (H/W/L) [mm]	533 x 352 x 378		534 x 398 x 429		593 x 399 x 479	
H [mm] (inch)	533	21.0	534	21.0	593	23.3
H1 height with silent block [mm] [inch]	571	22.5	572	22.5	635	25.0
W [mm] [inch]	352	13.9	398	15.7	399	15.7
L [mm] [inch]	378	14.9	429	16.9	479	18.9
L1 with mounting bases without hydraulic connection pieces [mm] [inch]	414	16.3	465	18.3	515	20.3
L2 with hydraulic connections [mm] [inch]	468	18.4	508	20.0	515	20.3
Minimum spacing / recommended spacing, refer to chapter 13.1, "Dimensions and minimum distances" on page 28						
CR [mm] [inch]	80	3,1	80	3,1	80	3,1
CL [mm] [inch]	80	3,1	80	3,1	80	3,1
CF [mm] [inch]	100	3.9	100	3.9	100	3.9
CB [mm] [inch]	100	3.9	100	3.9	100	3.9
CT [mm] [inch]	250	9.8	250	9.8	250	9.8
[1] kBTU/h and electrical data based on 7 °C / 12 °C cold water temperature and 30 °C / 35 °C sea water temperature						
[2] Amperage values for core unit depend on compressor load. Maximum value under rated conditions at 50Hz.						

Table 3: Technical data VX 36M / VX 48M / VX 60M

Technical data VX 72M / VX 120M

Type	VX 72M 1ph		VX 72M 3ph		VX 120M	
Min. cooling capacity [kBTU/h] [kW](1)	7.1	2.1	7.1	2.1	10.0	2.9
Max. cooling capacity [kBTU/h] [kW](1)	72	21.1	72	21.1	120	35.2
Max. heating capacity [kBTU/h] [kW](1)	78.5	23.0	78.5	23.0	121.1	35.5
Rated voltage / phase [V/ph]	230 1-Ph		208 3-Ph		230 1-Ph	
Frequency [Hz]	50 - 60		60		50 - 60	
Current consumption, operation [A] (2)	23		16		36	
Current consumption in Eco mode (Eco 1) [A]	17.8		11		27	
Current consumption in Eco mode (Eco 2) [A]	11.5		608		21	
Current consumption in Eco mode (Eco 3) [A]	7.8		5		12	
Current consumption during start [A]	4		3		4	
Max. current consumption peak [A]	24		20		39	
Power consumption cooling [kW]	5.3		5.3		8.3	
Current consumption heating [A]	23		16		36	
Power consumption heating [kW]	5.3		5.3		8.3	
ø Cold water connection [mm] [inch]	IG 32	BSPP female 1 ¼“	IG 32	BSPP female 1 ¼“	IG 32	BSPP female 1 ¼“
Minimum cold water flow rate [l/min]	60		60		95	
ø Sea water connection [mm] [inch]	IG 25	BSPP female 1"	IG 25	BSPP female 1"	IG 32	BSPP female 1 ¼“
Minimum sea-water flow rate [l/min]	65		65		100	
Max. permissible ambient temperature [°C]	0	55	0	55	0	55
Max. permissible ambient temperature with reduced performance [°C] min [°C] max	0	60	0	60	0	60
Min. sea water temperature in heating mode [°C]	5		5		5	
Max. sea water temperature in cooling mode [°C]	40		40		40	
Max. sea water temperature in cooling mode with reduced performance [°C]	45		45		45	
Weight [kg]	92		94		130	
For dimensions see also chapter 13.1, "Dimensions and minimum distances" on page 28						
Dimensions (H/W/L) [mm]	683x398x546		698 x 401 x 546		771x401x638	
H [mm] (inch)	683	26.9	698	27.0	771	30.4
H1 height with silent block [mm] [inch]	725	28.5	740	29.1	824	32.4
W [mm] [inch]	398	15.7	401	15.8	401	15.8
L [mm] [inch]	546	21.5	546	21.5	638	25.0
L1 with mounting bases without hydraulic connection pieces [mm] [inch]	583	23.0	583	23.0	675	26.6
L2 with hydraulic connections [mm] [inch]	615	24.2	615	24.2	701	27.6
Minimum spacing / recommended spacing, refer to chapter 13.1, "Dimensions and minimum distances" on page 28						
CR [mm] [inch]	80	3.1	80	3.1	80	3.1
CL [mm] [inch]	80	3.1	80	3.1	80	3.1
CF [mm] [inch]	100	3.9	100	3.9	100	3.9
CB [mm] [inch]	100	3.9	100	3.9	100	3.9
CT [mm] [inch]	250	9.8	250	9.8	250	9.8
[1] kBTU/h and electrical data based on 7 °C / 12 °C cold water temperature and 30 °C / 35 °C sea water temperature						
[2] Amperage values for core unit depend on compressor load. Maximum value under rated conditions at 50Hz.						

Table 4: Technical data VX 72M / VX 120M

13.1 Dimensions and minimum distances

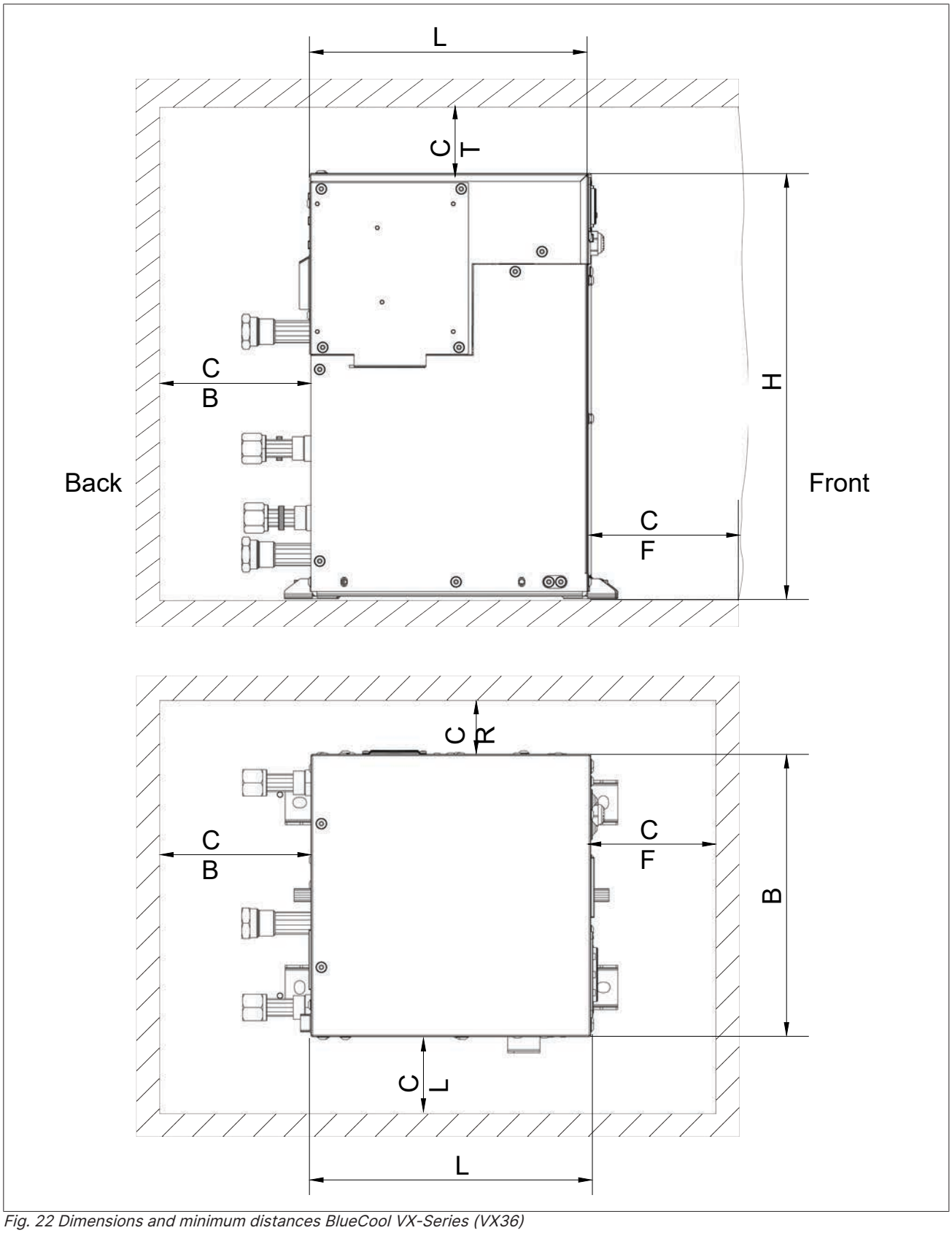

Fig. 22 Dimensions and minimum distances BlueCool VX-Series (VX36)

L	Length	CR	Min/Rec Clearance Right
H	Height	CT	Min/Rec Clearance Top
B	Width	CL	Min/Rec Clearance Left
CF	Min/Rec Clearance Front	CB	Min/Rec Clearance Back

The small values must be observed on all sides and the larger values on at least one side in order to be able to change the filter.

14 Annex

14.1 Overview of control and setting levels

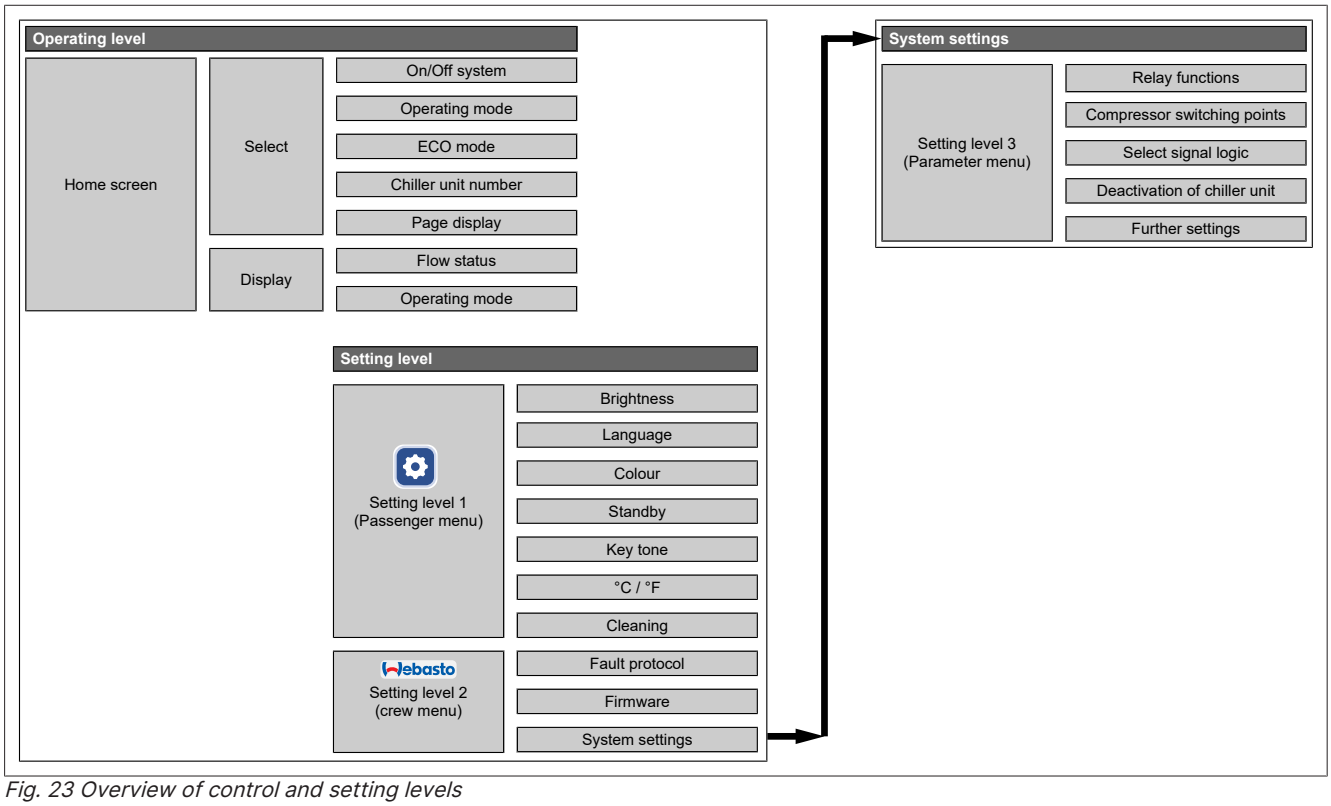

Fig. 23 Overview of control and setting levels

14.2 Parameter settings

14.2.1 Parameter list home screen

	Parameter	Meaning	Unit / parameter	Value range	Factory setting
Home screen	On/Off system	On/Off switch for all chiller units in the system	-	On, Off	-
	Operating mode	Changes the operating mode	-	COOL (cooling only)	
				HEAT (heating only)	
				AUX (heating only with ext. heater)	
	ECO mode VX series	Selection of the max. system performance in ECO mode	-	ECO Off (100% rated power)	-
				ECO 1 (approx. 75% of the rated output, 70% of the power consumption)	-
				ECO 2 (approx. 60% of the rated output, 50% of the power consumption)	-
				ECO 3 (approx. 45% of the rated output, 33% of the power consumption)	-
				COP up to 5.6	

	Parameter	Meaning	Unit / parameter	Value range	Factory setting
	Unit	Set the display of a chiller unit	-	1-6; S	-
	page	Set the home screen page	-	1.2	
	Flow status	Display the flow status of the cold water (CW) and sea water pump (SW)	-	green (flow quantity sufficient)	-
				yellow (check flow quantity)	
				red (immediate flow monitoring required)	
	Operating values of system	Sea water entry temperature	°C, °F	Page 1, system	-
		Sea water exit temperature	°C, °F		-
		Cold water inlet temperature	°C, °F		-
		Cold water outlet temperature	°C, °F		-
		System performance	%, idle		-
		current consumption in system	A	Page 2, system	-
		Voltage	V		-
		Frequency	Hz		-
		System operating hours	h		-
		-	-		-
	Chiller unit operating values	Chiller unit output	%, idle	Page 1, unit	-
		Chiller unit current consumption	A		-
		Flow rate of cold water	l, gal		-
		Flow rate of sea water	l, gal		-
		High pressure	bar		-
		Low pressure	bar	Page 2, unit	-

Table 5: Parameter list home screen

14.2.2 Parameter list for settings menu

	Parameter	Meaning	Unit / parameter	Value range	Factory setting
Settings	Brightness	Sets the screen brightness	Percentage	5-100%	100%
	Language	Sets the operating language	Language	English	English
				English	-
				Français	-
				Español	-
				Italiano	-
				Nederlands	-
				Polski	-
				Русский	-
				Türkçe	-
				Slovenščina	-
	Colour	Background colour	-	White	White
				Black	-
	Standby	Selects the standby mode display	-	1 Webasto logo	Webasto logo
			-	2 Customer logo	-
			-	3 Standby off	-

	Parameter	Meaning	Unit / parameter	Value range	Factory setting
			°C, °F	4 System: cold water temperature	
			°C, °F	5 System: sea water temperature	
			A; %	6. System: current consumption, output	
			V	7 System: mains voltage	
			Hz	8 System: supply frequency	
			Hz	9 System: operating hours	
			-	10 System: status	
			l/min, gal/min	11 Chiller unit: flow rates	
			A; %	12 Chiller unit: current consumption, output	
			bar	13 Chiller unit: high pressure, low pressure	
			-	14 Chiller unit: status	
	Key tone	-	-	On, Off	On
	°C / °F	Display metric or imperial	-	°C, °F ; l/min, gal/min; bar, PSI	Metric
	Cleaning	Disables the touch screen for 30 seconds	-	-	-

Table 6: Parameter list settings

14.2.3 Parameter list, Setting level 2 (Crew Menu)

	Parameter	Meaning	Unit / parameter	Value range	Factory setting
Setting level 2	Fault protocol	Event counter	Number	1 - 99999	-
		Error code	Number	E1 -E353	-
		Fault counter	Number	1 - 99999	-
		Operating time	Number	1 - 99999	-
	Firmware	Firmware version	-	Example: 3.2	-
	System settings	Access to setting level 3 with code entry. Code entry is not required if code = 00 Code entry is not required if code = 00	-	-	-

Table 7: Parameter list of setting level 2

14.2.4 Parameter list, Setting level 3 (Parameter menu)

	Parameter	Meaning	Unit / parameter	Value range	Factory setting
Setting level 3	Relay functions	Relay 1 (K101)	-	External heater (0)	Relay 1: External heater (0)
			-	Alarm indicator (1)	-
			-	Load shedding (2)	-
			-	Valve heater (3)	-
			-	Heat mode display (4)	-
			-	Indicator lamp (5)	-
		Relay 2 (K102)	-	External heater (0)	Relay 2: Valve heater (3)
			-	Alarm indicator (1)	-
			-	Load shedding (2)	-
			-	Valve heater (3)	-

	Parameter	Meaning	Unit / parameter	Value range	Factory setting
			-	Heat mode display (4)	-
			-	Indicator lamp (5)	-
		Relay 3 (K103)	-	Reserved for internal functions e.g. fan controller or indicator lamp.	-
	Compressor switching points	Switch-off temperature cooling	°C (°F)	-5 - 0 (23-32)	0 °C / 32 °F
		Switch-off temperature heating	°C (°F)	55-60 (131-140)	55 °C / 131 °F
		Setpoint temperature for cooling	°C (°F)	0-15 (32-59)	4 °C / 39 °F
		Setpoint temperature for heating	°C (°F)	40-55 (104-131)	45 °C / 113 °F
	Further settings	Access code	-	00 = entry of access code not necessary to access setting level 3. 01 to 99 = Access code activated.	64
		Undervoltage switch-off	Volt	180 to 210	
		CAN-bus address	-	1 to 239	195
		Factory setting	-	reset	-
		Terminating resistor	-	ON, OFF	
	Calibration of flow measurement	Cold water inlet sensor	°C (°F)	-5.5 - 5.5 (-9.9 - 9.9)	0
		Cold water outlet sensor	°C (°F)	-5.5 - 5.5 (-9.9 - 9.9)	0
		Sea water inlet sensor	°C (°F)	-5.5 - 5.5 (-9.9 - 9.9)	0
		Sea water outlet sensor	°C (°F)	-5.5 - 5.5 (-9.9 - 9.9)	0
	Select signal logic	Select signal logic for an external switch	-	Deactivated	Deactivated
			-	Pushbutton	
			-	Switch	
			-	Operating mode switch	
			-	Emergency stop switch	
			-	Pushbutton and emergency stop switch	
			-	Operating mode and emergency stop switch	
	Deactivation of chiller unit	Chiller unit 1	-	On, Off	On
		Chiller unit 2	-	On, Off	On
		Chiller unit 3	-	On, Off	On
		Chiller unit 4	-	On, Off	On
		Chiller unit 5	-	On, Off	On
		Chiller unit 6	-	On, Off	On
	Chiller unit number	Numbering of chiller unit	-	1-6, 16 for VX system card	1

Table 8: Parameter list of setting level 3

14.3 Wiring diagrams

14.3.1 Line fuses

Type	VX 36M	VX 48M	V60M	VX 72M 1ph	VX 72M 3ph	VX 120M
Necessary line fuse protection [A]	25	25	32	32	25	50

14.3.2 Wiring diagram

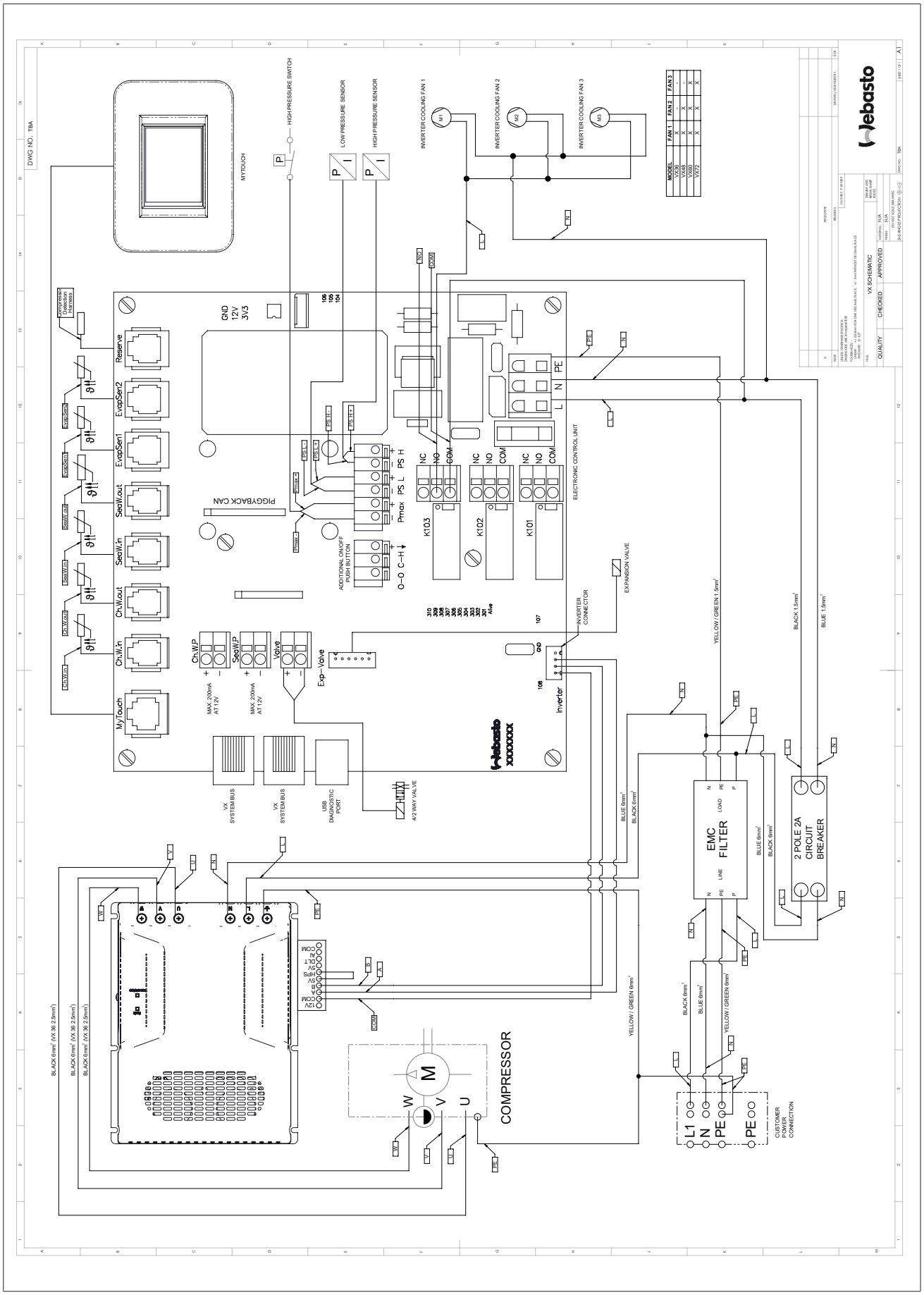

Fig. 24 Wiring diagram VX36-72 230V 1 phase

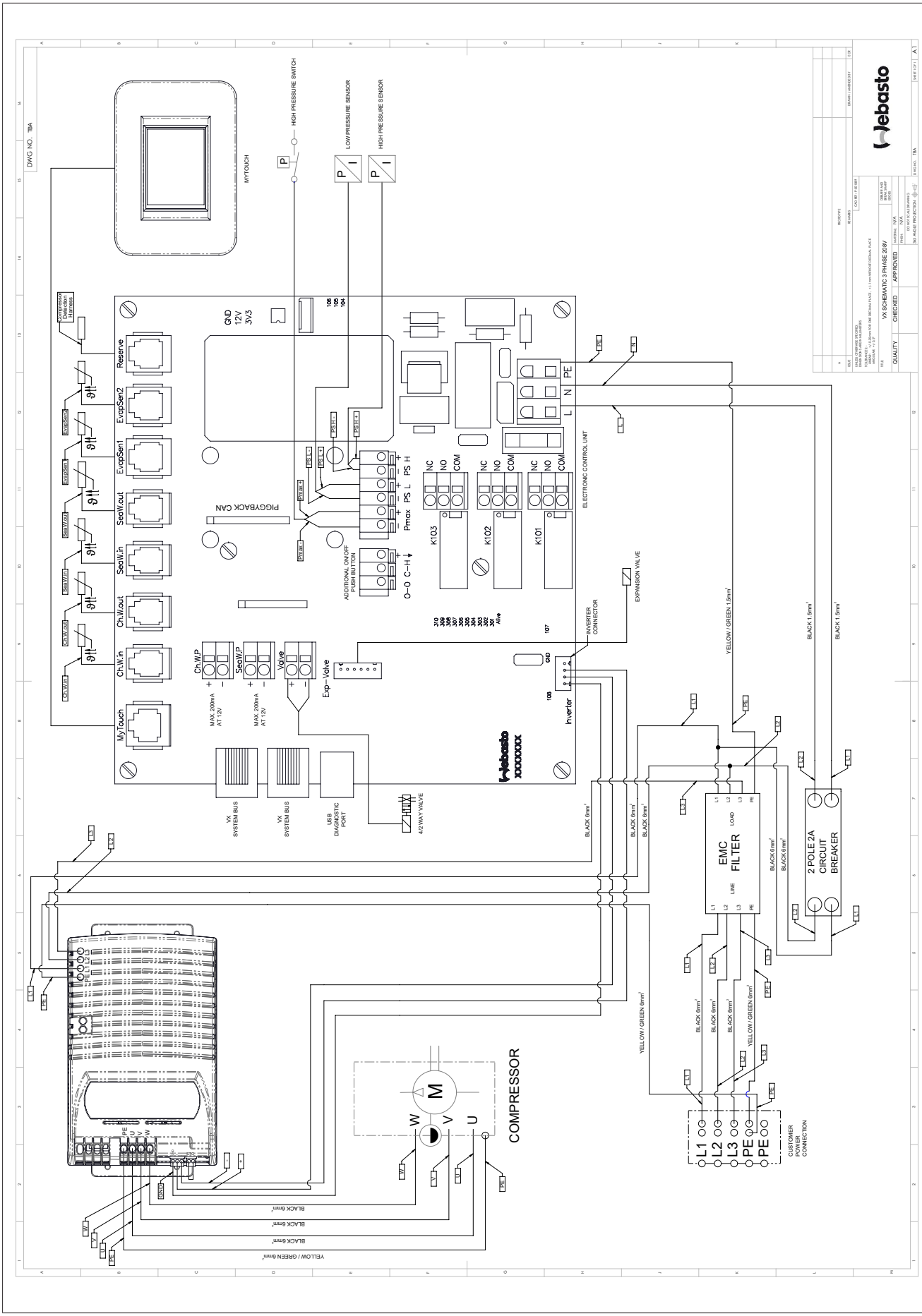

Fig. 25 Wiring diagram VX72 208V 3 phases

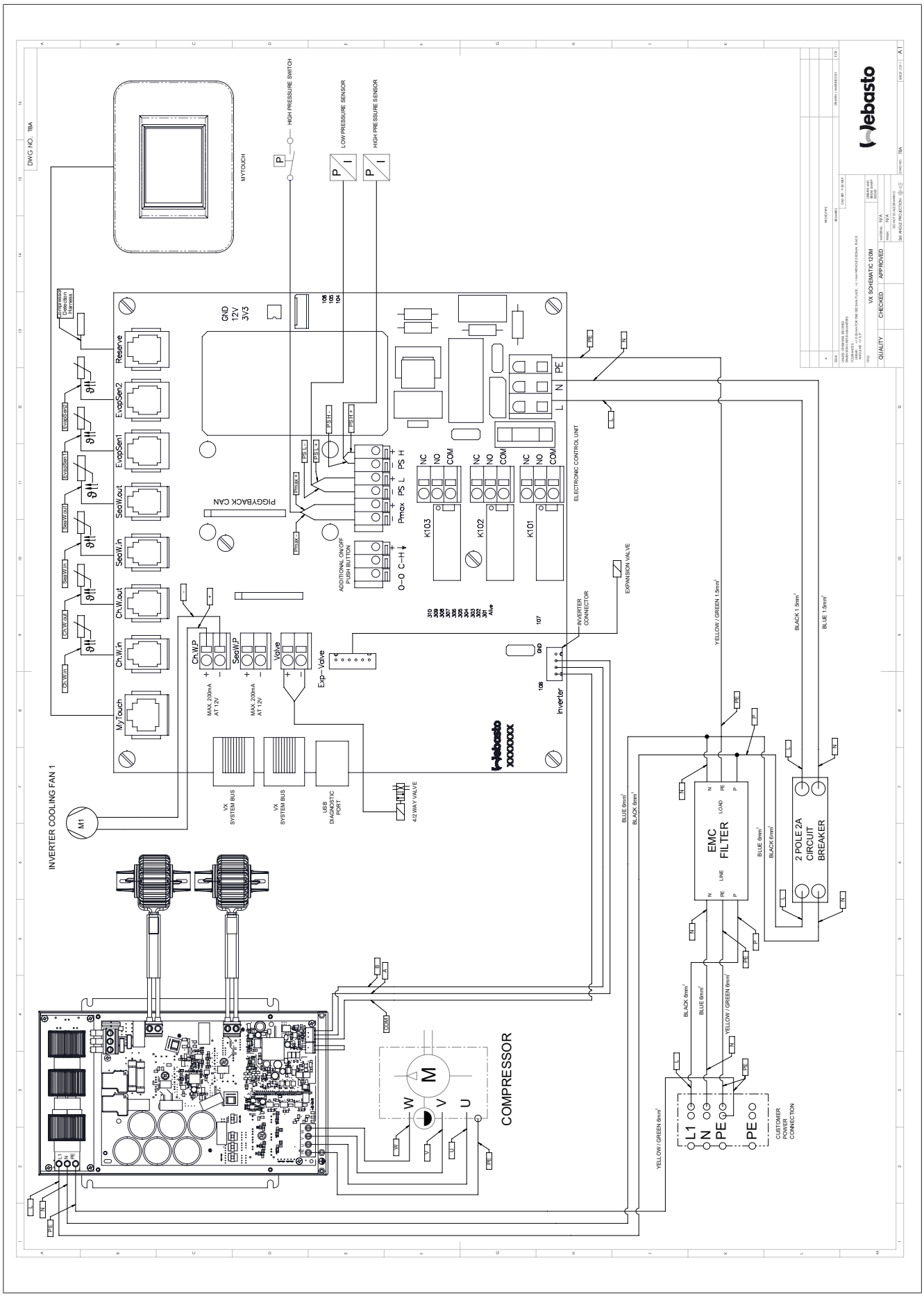

Fig. 26 Wiring diagram VX120 230V 1 phase

14.3.3 Pump relay box wiring diagram

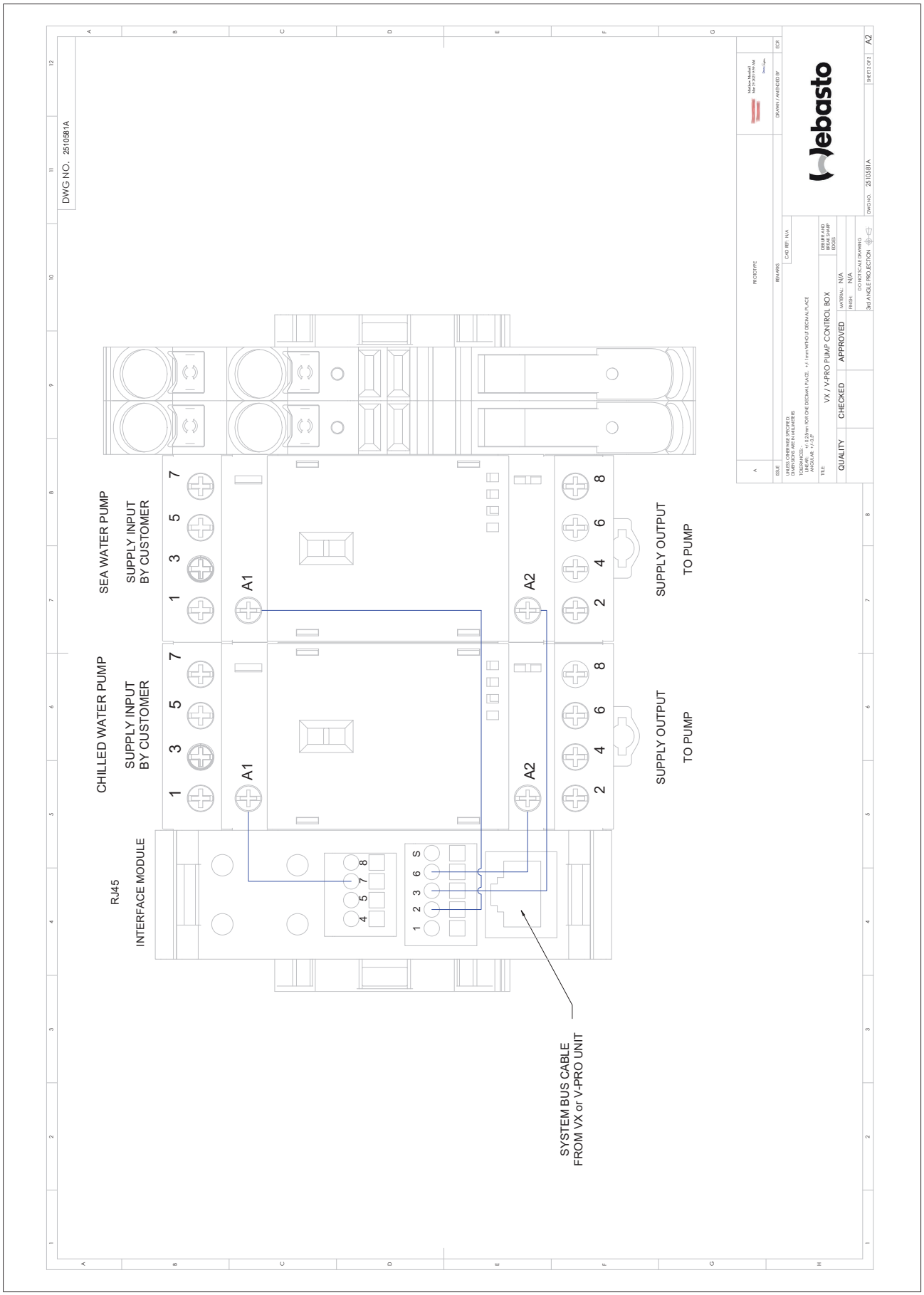

Fig. 27 Pump relay box wiring diagram

14.3.4 Application example for water heater / external heating

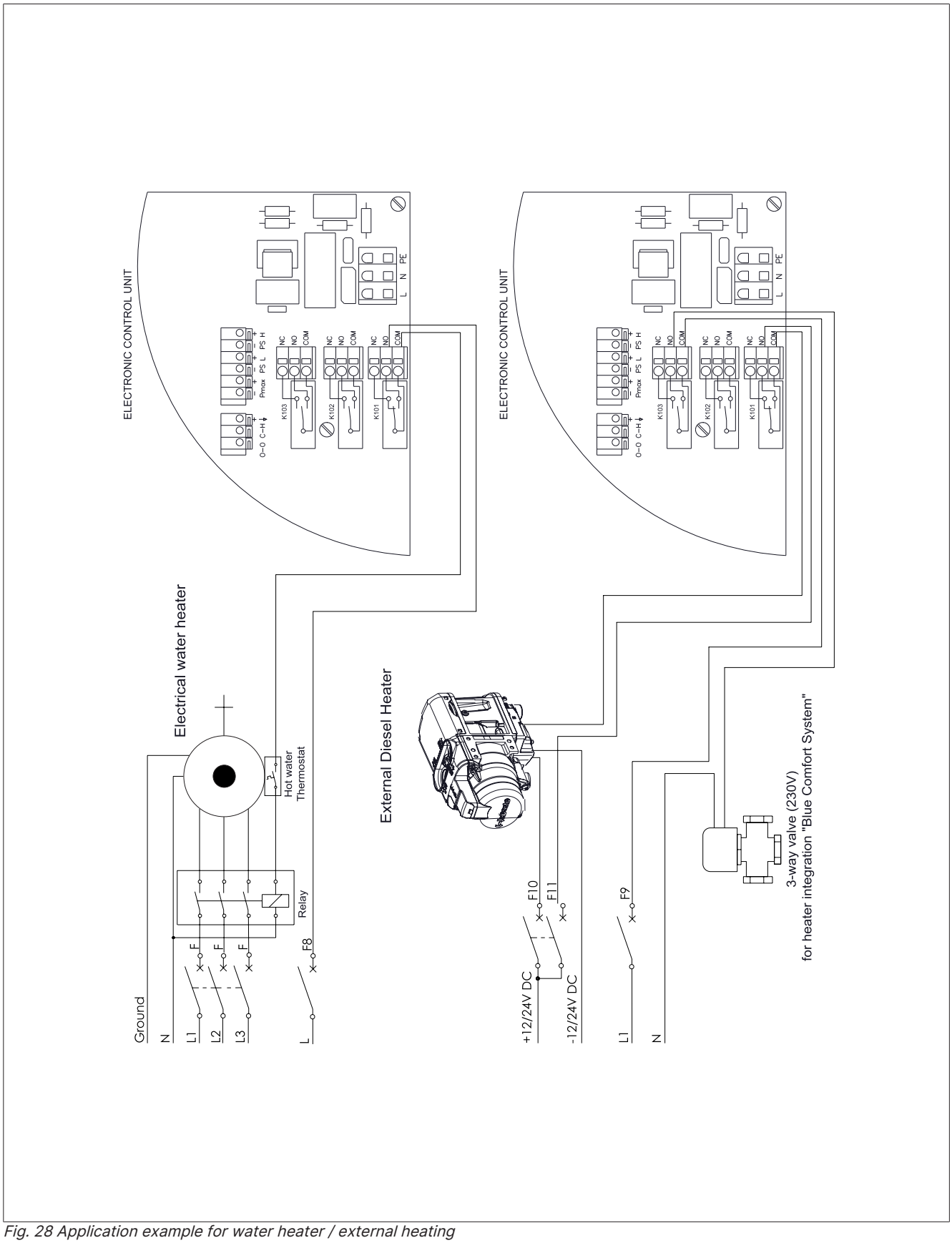

Fig. 28 Application example for water heater / external heating

Webasto
Feel the Drive

To request this documentation in another language, please locate and contact your local Webasto dealer. You can find your nearest dealer at: https://dealerlocator.webasto.com/en-int.
To provide feedback (in English or German), please email: feedback2tdt@webasto.com

Ident No. 9045381C • 10/2026 • Errors and omissions excepted • © Webasto

Europe, Asia Pacific:

Webasto
Kraillinger Str. 5
82131 Stockdorf
Germany

UK only:

Webasto Thermo & Comfort UK Ltd
Webasto House
White Rose Way
Doncaster Carr
South Yorkshire
DN4 5JH
United Kingdom

USA only:

Webasto Thermo & Comfort N.A., Inc.
15083 North Road
Fenton, MI 48430

Technical Assistance Hotline
USA: (800) 860-7866
Canada: (800) 667-8900

www.webasto.us
www.techwebasto.com

9045381C