Product Information Marine 02-2023

BlueCool Easy Duct

Uwe Nolte

Gilching, 14.02.2023

New variant with improved product features

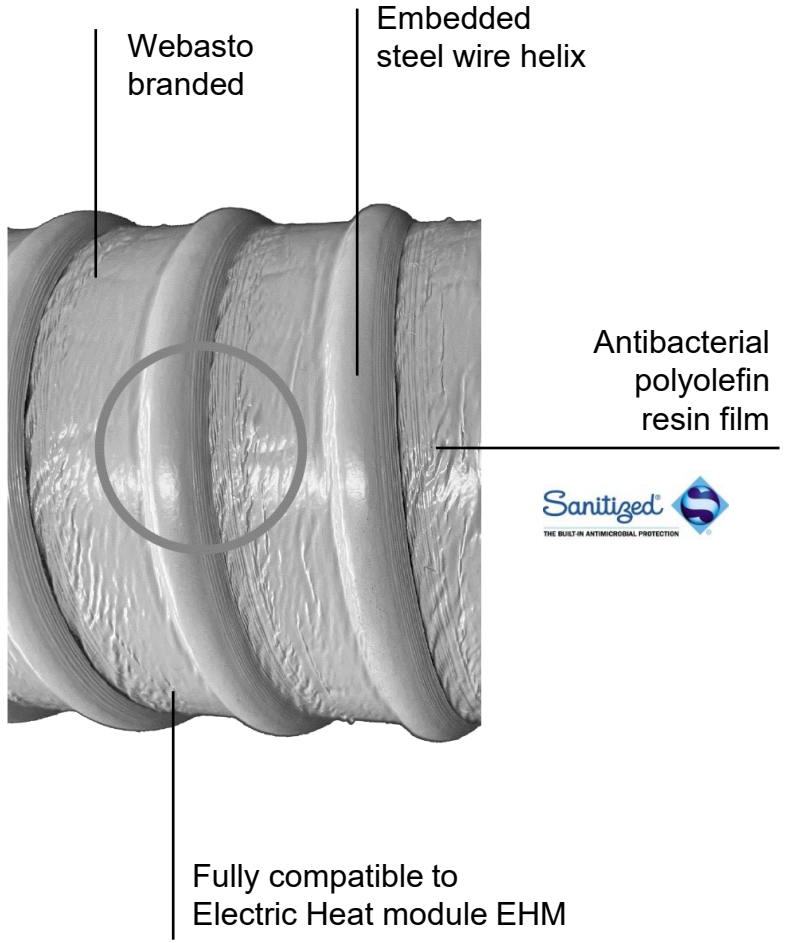

BlueCool Easy Duct

- Improved insulated flexible air duct
- Performance tested polyethylene insulation
- Inner layer with polyolefin resin film with antibacterial and anti-mildew master
- Available in 4 sizes with 80 mm, 102, 127 and 152 mm (3”, 4”, 5”, 6”)
- Fully compatible to BlueCool S-Series, BlueCool A-Series and Electric Heat module EHM

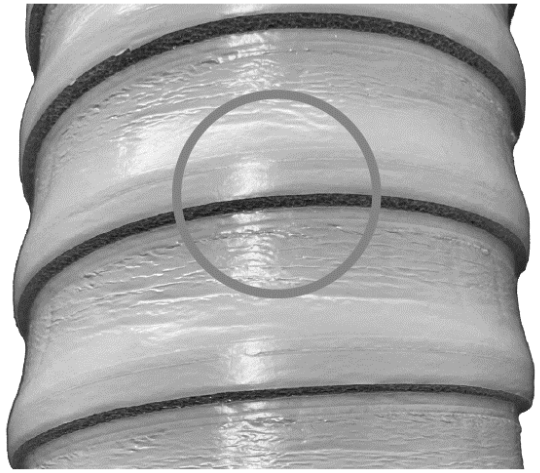

Old

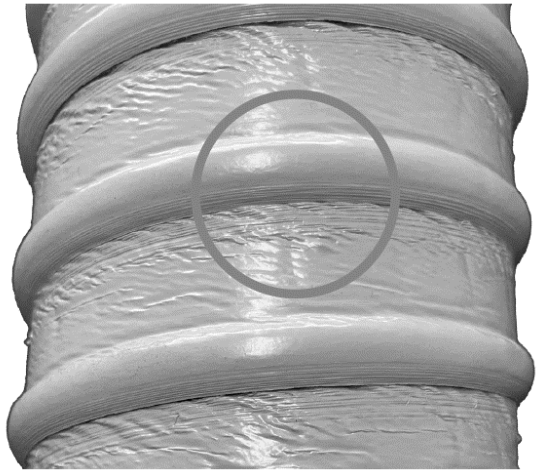

New

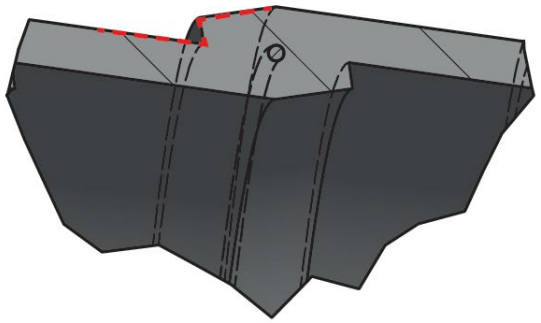

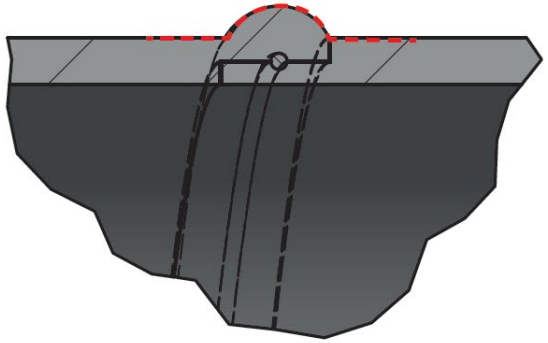

External surface

Improved

- Improved outer surface
- Optimized welding of the outer laps
- Fully encapsulated insulation material
- Improved professional appearance

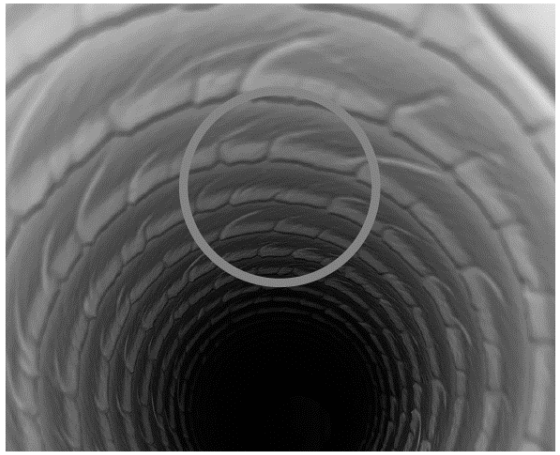

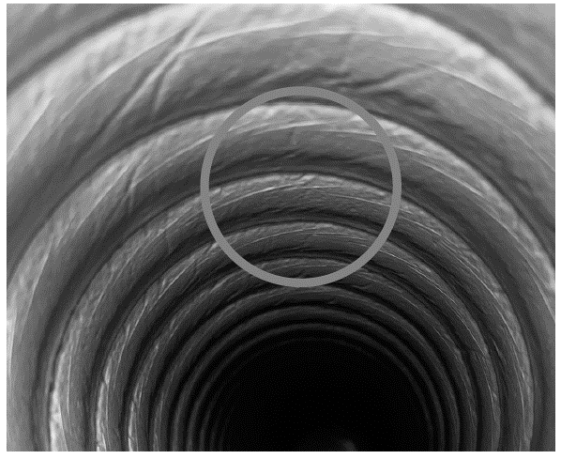

Old

New

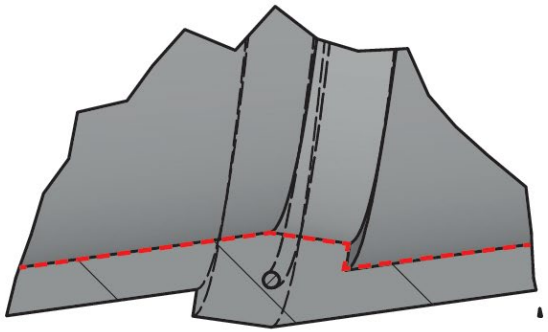

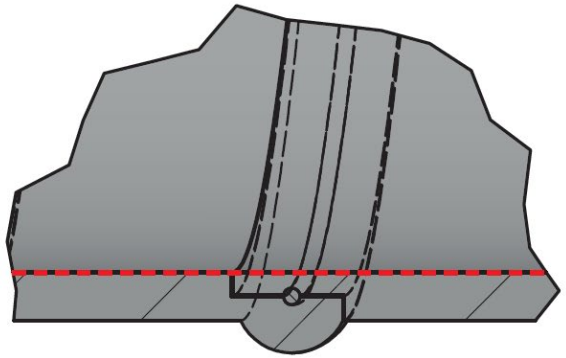

Internal surface

Improved

- New extremely smooth inner surface
- Optimized welding of the inner laps
- New heat-sealing process to optimize insulation thickness
- High reduction of internal pressure losses*

*compared to predecessor



Old



New

Size	Internal bending radius	
Inner diameter [mm]	[mm]	Reduction in %
80	18	-39%
102	29	-40%
127	46	-41%
152	65	-43%

Improved bending radius by up to 43%*.

Bending radius

Improved

- Improved flexibility
- Bending radius improved up to 43%
- Allows additional application options

Reduced pressure loss

Diameter			Pressure loss									
[mm]	Air speed	[m/s]	1	2	3	4	5	6	7	8	9	10
80	Flow Rate	[m3/h]	18	36	54	72	90	109	127	145	163	181
	Pressure loss	[Pa/m]	0,3	1,2	2,6	4,6	7,2	10,2	13,9	18	22,7	28
	Reduction*		-16%	-19%	-20%	-21%	-22%	-22%	-22%	-22%	-23%	-23%
102	Flow Rate	[m3/h]	29	59	88	118	147	176	206	235	265	294
	Pressure loss	[Pa/m]	0,2	0,9	2	3,4	5,3	7,6	10,2	13,3	16,8	20,7
	Reduction*		-16%	-19%	-20%	-21%	-22%	-22%	-22%	-22%	-23%	-23%
127	Flow Rate	[m3/h]	46	91	137	182	228	274	319	365	410	456
	Pressure loss	[Pa/m]	0,2	0,7	1,5	2,6	4	5,7	7,8	10,1	12,8	15,7
	Reduction*		-9%	-12%	-13%	-14%	-14%	-14%	-14%	-15%	-15%	-15%
152	Flow Rate	[m3/h]	65	131	196	261	327	392	457	523	588	653
	Pressure loss	[Pa/m]	0,1	0,5	1,2	2,1	3,2	4,6	6,2	8,1	10,2	12,5
	Reduction*		-9%	-12%	-13%	-14%	-14%	-14%	-14%	-15%	-15%	-15%

Improved smooth inner surface reduces pressure loss by up to 23%*.

*compared to predecessor

Technical data

Model	Insulated Flex Air Duct DN80 - 3"	Insulated Flex Air Duct DN102 - 4"	Insulated Flex Air Duct DN127 - 5"	Insulated Flex Air Duct DN152 - 6"
Core material	Netted polyethylene foam type CL1, closed cell			
Inner layer	polyolefin resin film with antibacterial, anti-mildew and anti-viral material protection*			
Outer layer	polyolefin resin film			
Stability	embedded steel wire helix			
Color	light grey			
Length	6 m			
Air speed	max. 20 m/sec			
Operating pressure in bar	0,50	0,40	0,40	0,20
Operating vacuum in bar	0,09	0,08	0,07	0,05
Curvature radius in mm	56	70	92	105
Weight in gr./ m	154	200	254	308
Operating temperature	-20°C +90°C (peak 115°C) (Not for use with Air Top air heater)			
Density	30 kg/ m²			
Thermal resistivity at 20°C	R = 0,12m2 K/W (UNI EN 12664:2002)			

* Sanitized®

Predecessor / Successor

Old

Item number	Item description
WBCL007463A	INSULATED FLEX AIR DUCT DN80 3" L6M PE
WBCL007464A	INSULATED FLEX AIR DUCT DN102 4" L6M PE
WBCL007465A	INSULATED FLEX AIR DUCT DN127 5" L6M PE
WBCL007472A	INSULATED FLEX AIR DUCT DN152 6" L6M PE

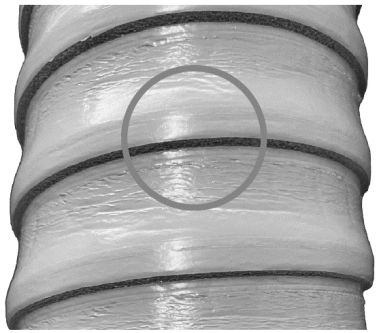

New

Item number	Item description
2510605A	INSULATED FLEX AIR DUCT DN80 3" L6M PE
2510606A	INSULATED FLEX AIR DUCT DN102 4" L6M PE
2510607A	INSULATED FLEX AIR DUCT DN127 5" L6M PE
2510608A	INSULATED FLEX AIR DUCT DN152 6" L6M PE

