# Installation Instructions

# Air Top 2000 STC

Air Heater



## English

# Contents


**1 General information ..... 3**
1.1 Purpose of the document ..... 3
1.2 Using this document ..... 3
1.3 Warranty and liability ..... 3
1.4 Use of symbols and highlighting ..... 3

**2 Safety ..... 3**
2.1 Intended use ..... 3
2.2 General safety information ..... 4
2.3 Regulations and legal requirements ..... 4

**3 Installing Heater ..... 5**
3.1 Installation location requirements: ..... 6
3.2 Installation example ..... 7
3.3 Dimensions and space requirements ..... 8
3.4 Permissible installation position ..... 9
3.5 Base seal ..... 9
3.6 Type label ..... 9

**4 Cold and hot air system ..... 9**
4.1 Information on cold and hot air system ..... 9
4.2 Cold and hot air ducts ..... 10
4.3 External room temperature sensor (optional) ..... 10

**5 Fuel supply ..... 10**
5.1 Permissible pressure at the fuel take-off point ..... 11
5.2 Removing fuel from vehicle's fuel supply and return line ..... 11
5.3 Taking off fuel from the vehicle tank ..... 11
5.4 Taking off fuel from a separate fuel tank ..... 12
5.5 Fuel line ..... 12
5.6 Fuel pump ..... 12
5.7 Fuel filter ..... 13
5.8 Fuel supply sticker ..... 13

**6 Combustion air system ..... 13**
6.1 Combustion air intake line ..... 13
6.2 Notes on combustion air system ..... 14
6.3 External combustion air intake silencer (optional) ..... 14

**7 Exhaust system ..... 14**
7.1 Notes on exhaust system ..... 14
7.2 Exhaust pipe ..... 14
7.3 Exhaust silencer (optional) ..... 15
7.4 Exhaust gas outlet ..... 15

**8 Electrical connection ..... 15**
8.1 Information on the electrical connection ..... 16
8.2 Connecting heater ..... 16
8.3 Connecting control element ..... 16
8.4 Connecting heater to ADR vehicles ..... 16
8.5 Cable cross-sections and colours ..... 16
8.6 Legend to wiring diagram ..... 16
8.7 Pin assignments plug connection X6 ..... 17
8.8 Wiring Diagram ..... 18

**9 Initial start-up ..... 21**
9.1 Product registration ..... 21
9.2 Checking operation with Webasto Thermo Test PC Diagnosis ..... 21

**10 Drilling template for heater Air Top 2000 STC ..... 22**

**11 Technical data ..... 23**

# 1 General information

## 1.1 Purpose of the document

These installation instructions are part of the Air Top 2000 STC and contain all the information required to ensure correct and safe installation.

**NOTE**
The actual availability of these functions depends on each installed heater.

**NOTE**
Carefully read through and follow the heater Installation Instructions and the safety information contained therein.

## 1.2 Using this document

The requirements of this document must be observed when installing the heater. The workshop manual must be followed when carrying out work to the heater.

To access further documents use one of the following options:

**The Webasto Dealer Portal**
(https://dealers.webasto.com)

**Webasto Service app (for installation)**
To download this app:

- ▶ scan the QR code below or

- ▶ go to:
  https://apps.apple.com/ (Apple App Store) or
  https://play.google.com/ (Google Play Store) as appropriate.

To use the Webasto Service App and access the online Webasto technical documentation, scan the QR code or the barcode on your Webasto product box.

Operating instructions are also available from the Webasto website at www.webasto.com. These instructions are available in a variety of other national languages on the Webasto website.

## 1.3 Warranty and liability

Webasto shall not assume liability for defects or damages that are the result of disregarding the installation and operating instructions. This liability exclusion particularly applies to:

- Installation or maintenance by untrained personnel.
- Improper use.
- Repairs not carried out by a Webasto service workshop.
- Use of non-genuine parts.
- Conversion of the unit without permission from Webasto.
- Mechanical damage to the equipment.
- Failure to comply with service instructions.

**DANGER**
Failure to follow the installation instructions and the notes contained therein will lead to all liability being refused by Webasto. The same applies if repairs are carried out incorrectly or with the use of parts other than genuine spare parts. This will result in the invalidation of the type approval for the heater and therefore of its homologation / EC type licence.

**WARNING**
Repair and maintenance work on the heater requires specialist knowledge and special tools. Incorrect adjustment or maintenance can cause damage to the heater or accidents which will result in serious damage.

**The installation personnel must have the following qualifications:**

- Successful completion of Webasto training.
- Corresponding qualification for working on technical systems.

## 1.4 Use of symbols and highlighting

**DANGER**
This signal word denotes a hazard with a **high** degree of risk which, if not avoided, may lead to death or serious injury.

**WARNING**
This signal word denotes a hazard with a moderate degree of risk which, if not avoided, may lead to minor or moderate injury.

**CAUTION**
This signal word denotes a hazard with a **low** degree of risk which, if not avoided, may lead to minor or moderate injury.

**NOTE**
This symbol denotes a special technical feature, or (if not observed) potential damage to the product.

This symbol refers to separate documents which may be enclosed or can be requested from Webasto.

- ✓ Requirements for the following necessary action
- ▶ Necessary action

# 2 Safety

## 2.1 Intended use

**NOTE**
The heater must not be used for safety-related purposes. It serves to provide comfort.

The heater works independently of the vehicle engine and is integrated in the electrical system of the vehicle.

The heater is approved for the following applications:

- Car, light truck (LCV)
- Trucks, buses in EU vehicle classes **M**, **N** and **O.**
- Caravans, motor homes, boats, pleasure craft
- Earth-moving machinery
- Construction machines
- Industrial trucks
- Vehicles that can be used in commercial, light-industrial and industrial environments.
- Agriculture and forestry machines

## 2.2 General safety information

### 2.2.1 Safety information on operation

**DANGER**

**Risk of injury from the defective unit**

Do not operate a defective Air Top 2000 STC and put it out of service by removing the fuse:

- prolonged heavy smoke development.
- unusual burner noise.
- smell of fuel.
- permanent fault switch-offs with error messages (flash code).
- damaged heater.

▶ Contact a Webasto service workshop.

**DANGER**

**Risk of explosion from explosive and flammable hazardous goods**

For hazardous material vehicles, restriction of the heater operation (ADR) is required to prevent severe burns.

▶ Do not operate the heater at hazardous material loading points.

▶ Do not operate the heater when loading and unloading hazardous materials.

**DANGER**

**Danger of fire**

Flammable materials or liquids in the hot air flow.

▶ Keep the hot air flow free.

**DANGER**

**Danger of poisoning and suffocation due to exhaust fumes**

Make sure that:

▶ the casing rests only on the base after installation.

▶ the base seal is fitted correctly.

▶ Exhaust gasses are routed only to the outside.

**WARNING**

**Danger of explosion and suffocation**

Do not operate the heater:

▶ at filling stations and tank facilities.

▶ at locations where highly flammable gases or dust can form, or at locations where highly flammable liquids or solid materials are stored (e.g. near fuel, coal and wood dust, grain storage areas, dry grass and leaves, cardboard boxes, paper, etc.).

▶ in closed rooms such as garages that do not have an exhaust extraction unit, especially not with programmed heating start (time preselect or remote start).

**NOTE**

**Incorrect handling**

▶ Protect the heater against mechanical stress (e.g. dropping, impacts or knocks).

▶ Do not stand on the heater.

▶ Do not place any objects on top of the heater.

▶ Avoid shutting down the heater incorrectly during the after-running period. After switching off via the control element, the fan of the heater continues to run.

▶ Always switch off the heater via the control element.

▶ Do not disconnect from the power supply until the after-running period has elapsed.

**NOTE**

▶ Do not operate heater without control unit cover in place.

### 2.2.2 Safety information on installation

**DANGER**

**Live parts are dangerous**

▶ Disconnect the vehicle from the voltage supply before installation.

▶ Make sure the electrical system is earthed correctly.

▶ Always comply with all legal requirements.

▶ Observe the information on the type label.

**DANGER**

The requirements stipulated in the current version of the ADR must be additionally observed when installing the corresponding heater in vehicles used to transport dangerous goods.

### 2.2.3 Avoiding damage to property

**NOTE**

After switching off via the control element, the fan of the heater continues to run (shortened to 40 s for ADR). Switching off incorrectly, without after-run, can cause damage to the Air Top 2000 STC.

▶ Always switch off the heater via the control element.

▶ The use of programmable control elements in ADR vehicles is not permitted.

**NOTE**

The heater is not approved for the purpose of directly heating the cargo area of ADR vehicles (hazardous substance transportation).

## 2.3 Regulations and legal requirements

The type approvals in accordance with the regulations ECE-R 122 (heating) and ECE-R 10 (EMC) for the Air Top 2000 STC heater apply in the area where the European regulation 2018/858 is valid.

Read and comply with the warnings and information in the installation instructions and operating instructions.

### 2.3.1 Application of combustion heaters in hazardous material vehicles (ADR)

The requirements stipulated in Regulation ECE R122, Annex 9 – Combustion Heaters – must additionally be observed when installing the Air Top 2000 STC in hazardous material vehicles. The relevant measures are specified in this document.

Vehicles used for the purpose of transporting dangerous goods are type approval tested in accordance with ECE R 105. The following measures are derived for our combustion heaters.

- The electrical cable/wiring harness must be sufficiently dimensioned to prevent overheating. The electrical cable/wiring harness must be sufficiently insulated. All electrical circuits must be protected by fuses or automatic circuit breakers. The cables must be installed and firmly secured such that the wirings are adequately protected against mechanical and thermal stress.
- The combustion heaters must be type-tested in accordance with ECE-R 122 and comply with Annex 9 - Additional regulations for vehicles used for transporting hazardous substances.
- The combustion heaters and their exhaust gas piping system must be designed, arranged, protected or covered so as to prevent any unacceptable risk of heating or ignition of the load.
- In the event of any fuel line leakage, the fuel shall drain to the ground without coming into contact with hot parts of the vehicle or the load.
- The exhaust system as well as the exhaust pipes shall be so directed or protected to avoid any danger to the load through heating or ignition. Parts of the exhaust system situated directly below the fuel tank shall have a clearance of 100 mm or be protected by a thermal shield.
- It must only be possible to switch the combustion heater on manually. Automatic switching on using a programmable switch or switch with remote control function is not permitted. The combustion heater may be switched back on manually after switching off the vehicle engine.

**Requirements relating to the basic unit:**

When switched off, it is permissible for combustion heaters to continue running for max. 40 seconds. Only combustion heaters are to be used with heat exchangers that are not damaged during their standard operating period by the reduced afterrunning time of 40 seconds.

### 2.3.2 ECE R122 Requirements

See eur-lex.europa.eu for more information.

Requirement from ECE-R 122:

Body sections and any other components in the vicinity of the heater must be protected from excessive heat and the possibility of fuel or oil contamination. (Point 5.3.2.1.).
The heater shall not constitute a risk of fire, even in the case of overheating. This requirement shall be deemed to be met if the installation ensures an adequate distance to all parts and suitable ventilation, by the use of fire resistant materials or by the use of heat shields. (Point 5.3.2.2.).
In the case of M2 and M3 vehicles, the combustion heater must not be positioned in the passenger compartment. However, an installation in an effectively sealed envelope which also complies with the conditions in paragraph 5.3.2.2 may be used. (Point 5.3.2.3.).
Every reasonable precaution should be taken in positioning the heater to minimize the risk of injury and damage to personal property. (Point 5.3.2.5.).
The fuel filler must not be situated in the passenger compartment and must be provided with an effective cap to prevent fuel spillage. (Point 5.3.3.1.).
In the case of liquid fuel heaters, where a supply separate from that of the vehicle is provided,the type of fuel and its filler must be clearly labelled. (Point 5.3.3.2.).
A notice, indicating that the heater must be shut down before refuelling, must be affixed to the filler neck of the vehicle. [...] (Point 5.3.3.3.).
The exhaust gas outlet must be located so as to prevent exhaust gas from entering the vehicle through ventilators, hot air inlets or open windows. (Point 5.3.4.1.).
The air for the combustion chamber of the heater must not be drawn from the passenger compartment of the vehicle. (Point 5.3.5.1.).
The air inlet must be so positioned or guarded that blocking by rubbish or luggage is unlikely. (Point 5.3.5.2.).
A clearly visible indicator lamp in the operator's field of view must indicate whether the combustion heater is switched on or off. (Annex 7, point 7.1.).

**Additionally for hazardous material vehicles (ADR)**

EX/II, EX/III, AT, FL and OX vehicles:
The combustion heaters and their exhaust gas routing shall be designed, located, protected or covered so as to prevent any unacceptable risk of heating or ignition of the load. This requirement shall be considered as fulfilled if the fuel tank and the exhaust system of the heater conform to the following provisions:

- Each fuel tank for supplying the heater must comply with the following regulations: In the event of a leak, the fuel must drain to the ground without coming into contact with hot parts of the vehicle or the load.
- The exhaust system as well as the exhaust pipes shall be so directed or protected to avoid any danger to the load through heating or ignition. Parts of the exhaust system situated directly below the fuel tank (...) shall have a clearance of at least 100 mm or be protected by a thermal shield.

Compliance with this paragraph shall be verified on the completed vehicle.
(Annex 9, point 3.1.1.).
EX/II, EX/III, AT, FL and OX vehicles:
The combustion heater shall be switched on manually. Programming devices are prohibited. (Annex 9, point 3.1.2.).
FL vehicles:
The combustion heaters shall be put out of operation by at least the following methods:
a ) Intentional manual switching off from the driver's cab;
b) Stopping of the vehicle engine; in this case the heater may be restarted manually by the driver;
c) Start up of a feed pump on the motor vehicle for the dangerous goods carried.
(Annex 9, point 3.3.1.).

# 3 Installing Heater

**DANGER**

**General**

The heater must not be installed:

- ▶ In the direct radiated heat range of exhaust systems.
- ▶ Below the maximum permitted fording level of the vehicle.

**DANGER**

Leaks can result in a higher noise level.

Ensure an adequate distance from the exhaust system to prevent the intake of exhaust gas!

## 3.1 Installation location requirements:



**DANGER**

**Danger of poisoning and suffocation due to exhaust fumes**

Make sure that:

- ▶ the casing rests only on the base after installation.
- ▶ the base seal is fitted correctly.
- ▶ Exhaust gasses are routed only to the outside.



**DANGER**

**Danger of overheating**

Outcome: Risk of fire. Protect vehicle components in the vicinity of the heater, hot air outlet and exhaust line from overheating by implementing the following measures:

- ▶ Maintain minimum safety distances.
- ▶ Ensure adequate ventilation.
- ▶ Use fire-resistant materials or heat shields.
- ▶ Always comply with legal requirements.
- ▶ When installing a heater in hazardous material vehicles: comply with ADR guidelines.

The installation location must satisfy the following requirements:

- ✓ There is sufficient space for the unit (see chapter 3.3, "Dimensions and space requirements" on page 8).
- ✓ The installation location is protected from mechanical damage.
- ✓ The installation location is protected from splash water and water spray wherever possible.
- ✓ The installation location is above the maximum permissible fording level of the vehicle.
- ✓ The combustion air inlet and exhaust gas outlet are separate (see Combustion air system and Exhaust system).
- ✓ The connections for the combustion air system and the exhaust system are completely on the outside.
- ✓ Persons cannot come in contact with hot surfaces. Install contact guard if necessary.
- ✓ Heat-sensitive parts are protected from high temperatures. Install heat shield if necessary.
- ✓ If the heater is installed within the reach of the driver, a contact guard must be installed.

## 3.2 Installation example

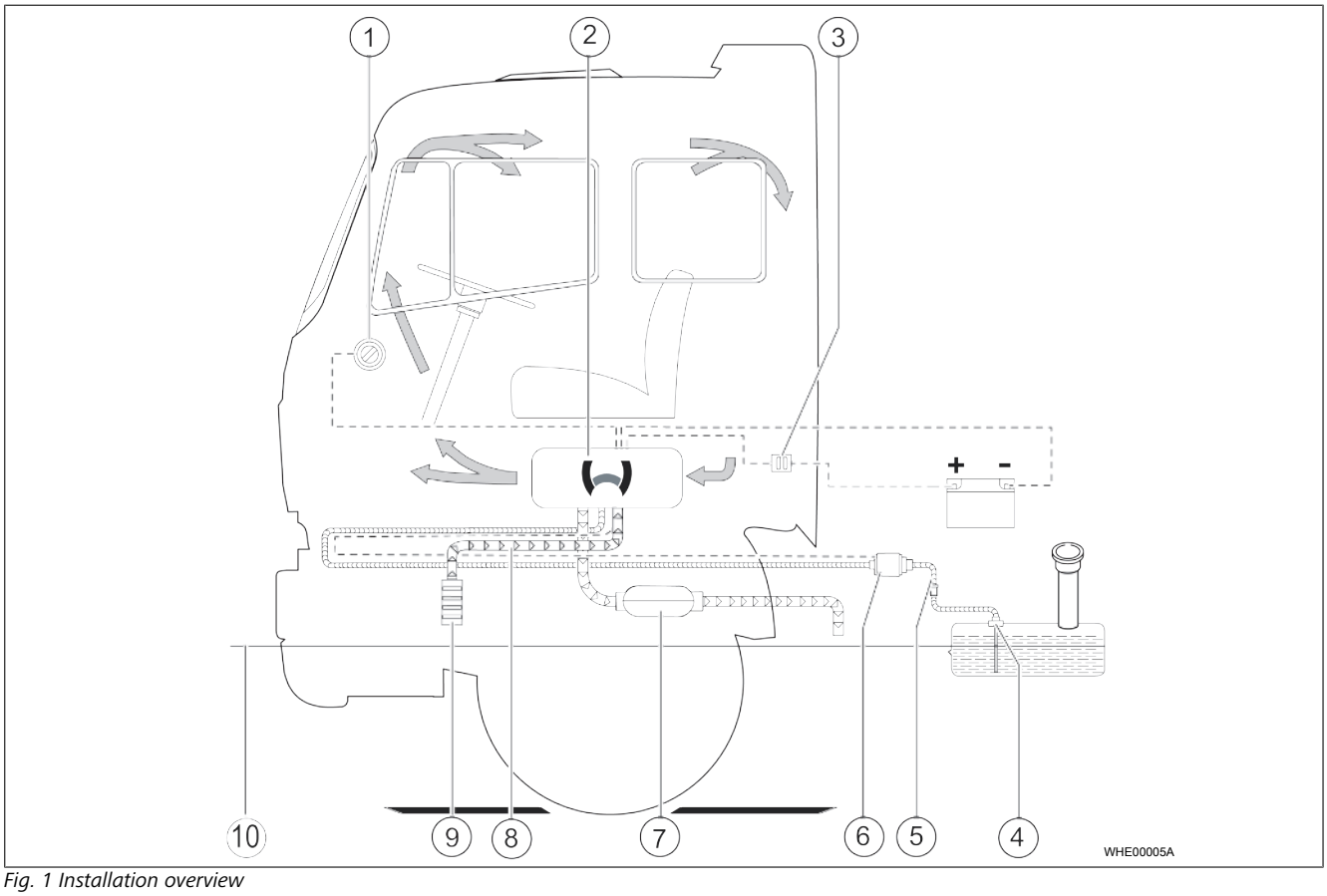


*Fig. 1 Installation overview*

| | | | |
|---|---|---|---|
| ① | Control element | ⑥ | Fuel pump |
| ② | Heater | ⑦ | Exhaust silencer (accessory) |
| ③ | Fuse | ⑧ | Combustion air intake line |
| ④ | Tank extracting device | ⑨ | Combustion air intake silencer (accessory) |
| ⑤ | Fuel filter (accessory) | ⑩ | Maximum permissible fording level |

## 3.3 Dimensions and space requirements

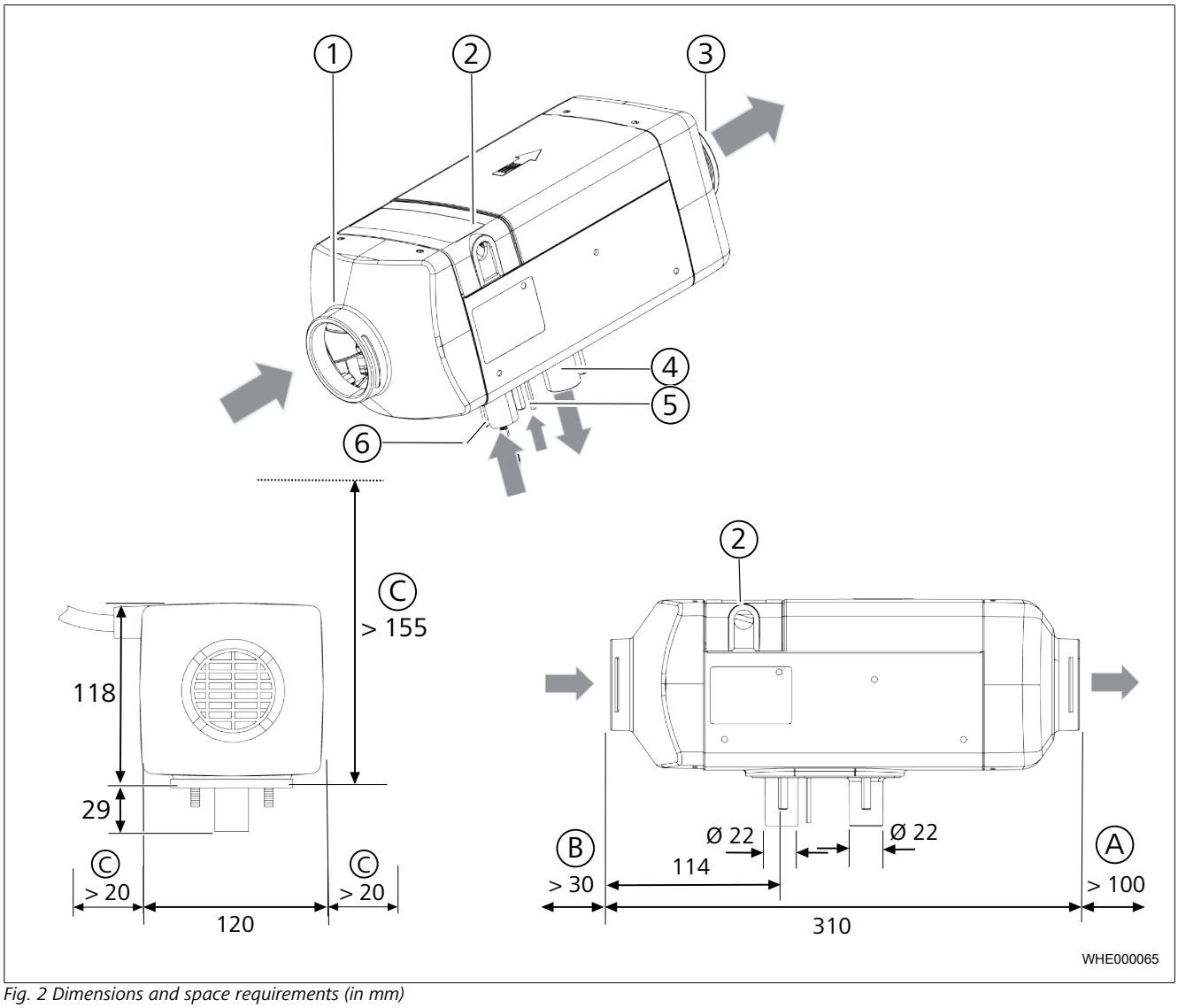


*Fig. 2 Dimensions and space requirements (in mm)*

| | | | |
|---|---|---|---|
| ① | Cold air inlet | ⑥ | Combustion air inlet |
| ② | Cable outlet (optionally on right or left) | Ⓐ | Recommended space requirements for hot air outlet (without air duct) |
| ③ | Hot air outlet | Ⓑ | Recommended space requirements for cold air inlet |
| ④ | Exhaust gas outlet | Ⓒ | Recommended space requirements for installing the heater |
| ⑤ | Fuel inlet | | |

## 3.4 Permissible installation position

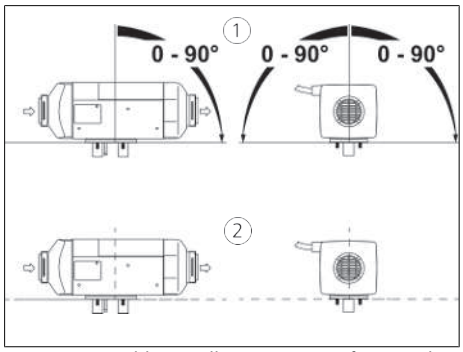


*Fig. 3 Permissible installation position for petrol and diesel*

| | |
|---|---|
| ① | Diesel |
| ② | Petrol: horizontal only |

✓ Ensure the correct installation position. See Fig. 3.

✓ Drill holes with the aid of the drilling template. See Fig. 27.

## 3.5 Base seal

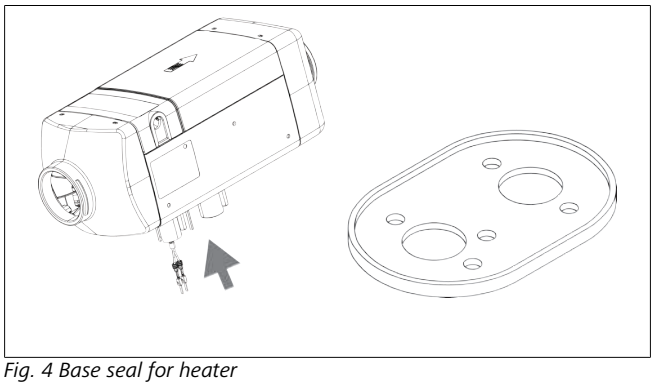

*Fig. 4 Base seal for heater*

▶ Fit base seal between heater and support surface.

**NOTE**

Unevenness >1 mm: Flatten out support surface.

▶ Secure heater at base with M6 nuts (6 Nm).

▶ Make sure that the heater rests only on the base.

## 3.6 Type label

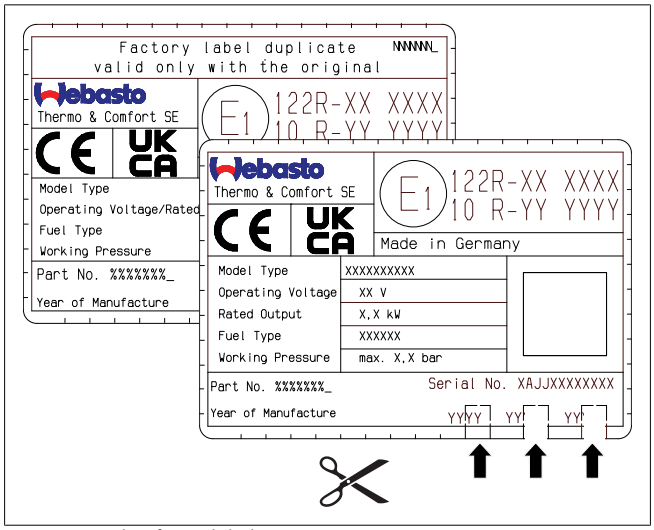


*Fig. 5 Example of type label*

Except for the year of installation, remove all the year numerals on the type label and type label duplicate.

If the type label (Fig. 5) is not visible after installing the heater:

▶ Secure the type label duplicate such that it is clearly visible in a protected area on the vehicle.

# 4 Cold and hot air system

## 4.1 Information on cold and hot air system

**NOTE**

The maximum permissible pressure loss in the hot air system must not exceed 1.5 hPa (see Technical data). The heating capacity will be reduced if the limit is exceeded.

▶ Do not connect the cold and hot air system of the heater to the externally controlled air routing systems (e.g. vehicle air conditioning system).

### 4.1.1 Recirculated air mode and fresh air mode

The cold air can be drawn in from the outside (fresh air mode) or inside (recirculated air mode).

### 4.1.2 Temperature control

There are two options for temperature control. One of the two options is specified automatically.

Options:

1. The heater regulates the heating capacity depending on the temperature of the cold air intake and the temperature set on the control element.
2. The heater regulates the heating capacity depending on the temperature of an external room temperature sensor and the setpoint temperature set on the control element. See chapter 4.3, "External room temperature sensor (optional)" on page 10.

### 4.1.3 Installation location requirements (cold air)

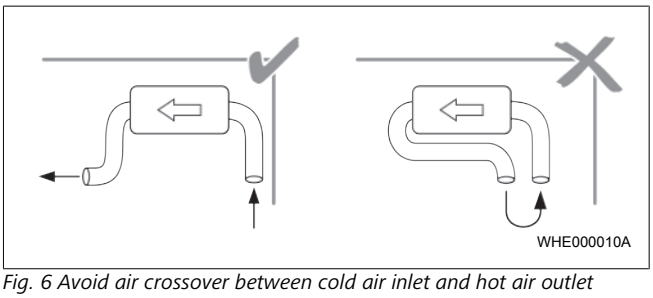


*Fig. 6 Avoid air crossover between cold air inlet and hot air outlet*

The installation location for the cold air inlet must satisfy following requirements:

✓ No hot air is drawn in from the vehicle's heating system.

✓ No hot air is drawn in from the heater.

✓ No exhaust air is drawn in.

✓ The installation location is protected from splash water and water spray.

✓ The installation location is above the maximum permissible fording level of the vehicle.

### 4.1.4 Installation location requirements (hot air)

**DANGER**

**Burn injuries**

Risk of burn injuries due to insufficient distance between hot air outlet and persons

- ▶ Persons must be protected from the direct hot air flow from the heater and from contact with surfaces that will become hot.
- ▶ Heat-sensitive parts must be protected from the direct hot air flow.

## 4.2 Cold and hot air ducts

### 4.2.1 Requirements for the cold and hot air ducts

| Requirements for the cold and hot air ducts | Value |
|---|---|
| Thermal endurance | > 130 °C |
| Recommended inside diameter of main hot air duct | 60 mm |

- ▶ Install cold and hot air ducts with minimal resistance to flow.

### 4.2.2 Installing cold and hot air ducts

**WARNING**

**Risk of injury by rotating fan wheel**

Lacerations. If no cold air duct is used: Install mesh guard over intake.

- ▶ Make sure that the installation location satisfies the requirements.
- ▶ Make sure that the hot air duct satisfies the requirements.
- ▶ Make sure the cold air inlet, hot air outlet as well as the cold and hot air ducting are installed in the correct position.
- ▶ Drill holes.
- ▶ Secure cold and hot air ducts at all connections.

### 4.2.3 Installation without cold air duct (cold air)

- ▶ Install the mesh guard on the cold air inlet side.

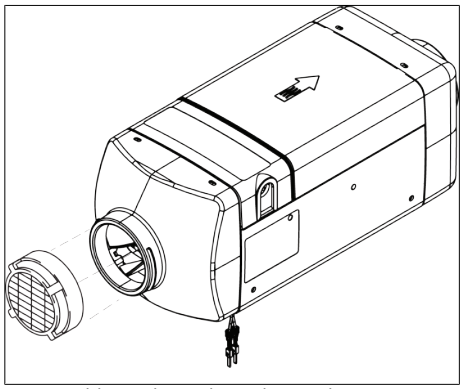

*Fig. 7 Cold air inlet with mesh guard*

### 4.2.4 Installing heater in casing

- Provide a cross section area of at least 50 $cm^2$ for the cold air inlet.
- Seal off the hot air outlet such that no hot air can enter the casing.

## 4.3 External room temperature sensor (optional)

### 4.3.1 Installation location requirements for the external room temperature sensor

The installation location must satisfy the following requirements:

- ✓ The installation location is at mid-level of the area to be heated.
- ✓ The installation location is outside the hot air flow.
- ✓ The installation location is outside the range of other heat sources (e.g. vehicle heating system).
- ✓ The installation location is not in direct sunlight (e.g. not on the dashboard).
- ✓ The air can circulate unhindered (e.g. not covered by curtains).

# 5 Fuel supply

The fuel can be taken off at the following points:

- Fuel supply or return pipe on vehicle engine
- Vehicle fuel tank
- Separate fuel tank

The fuel line consists of an intake and pressure side:

- Intake side: Connection of fuel tank to fuel pump
- Pressure side: Connection of fuel pump to heater

Preferably, install the heater and fuel pump components at the same height as the fuel tank. Failing that, pay attention to the figures and the tables.

**DANGER**

**Fuel leak if fuel line is damaged or components are faulty.**

**Outcome: Risk of fire.**

- ▶ If the fuel line is cut through or incorrectly fitted or if components fail, there is a risk of leaking fuel.

**WARNING**

Do not route the fuel lines through the vehicle interior.

**NOTE**

Preferably, install the heater and fuel pump at the same height as the fuel tank. Failing that, pay attention to the figures and the tables.

## 5.1 Permissible pressure at the fuel take-off point

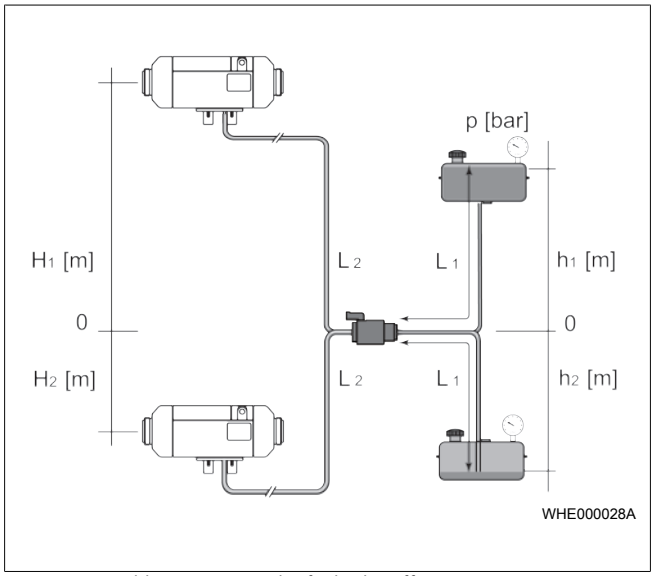


*Fig. 8 Permissible pressure at the fuel take-off point*

| Requirements for the fuel lines | | Value |
|---|---|---|
| | Inside diameter | 2 mm |
| L1 | Length (intake side) | max. 5m |
| L2 | Length (pressure side) | max. 10m |
| L1 + L2 | Overall length | max. 12m |
| H1 | Height difference from heater – fuel pump (heater above fuel pump) | max. 3m |
| H2 | Height difference from heater – fuel pump (heater below fuel pump) | max. 1m |

*Table 1: Limits for heights and lengths of fuel lines*

| h1 [m] | pmax [bar] |
|---|---|
| h1 = 0 | -0.1 to +0.5 |
| h1 = 0 to 1 | -0.1 to +0.4 |
| h1 = 1 to 2 | -0.1 to +0.3 |

*Table 2: Fuel pressure correction (tank above fuel pump)*

| h2 [m] | pmax [bar] |
|---|---|
| h2 = 0 to 1.3 | -0.1 to +0.5 |

*Table 3: Fuel pressure correction (tank below fuel pump)*

| Fuel pressure correction at height difference between tank and fuel pump [m] | pmax [bar] |
|---|---|
| h1 = 0 | -0.1 to +0.5 |
| h1 = 0 to 1 | -0.1 to +0.4 |
| h1 = 1 to 2 | -0.1 to +0.3 |
| h2 = 0 to 1.3 | -0.1 to +0.5 |

## 5.2 Removing fuel from vehicle's fuel supply and return line

### 5.2.1 Installing fuel extractor

✓ The pressure at the fuel take-off point is in the permissible range (see Fig. 8 and tables).

✓ Install only original Webasto fuel extractors.

✓ When taking off fuel at the return line:
- Make sure that the installation location satisfies the requirements.
- Make sure that the return pipe is not closed off by a non-return valve.
- Make sure that the return pipe extends to the base of the fuel tank.

✓ When taking off fuel from the swirl pot:
- Make sure that the swirl pot is not completely emptied.

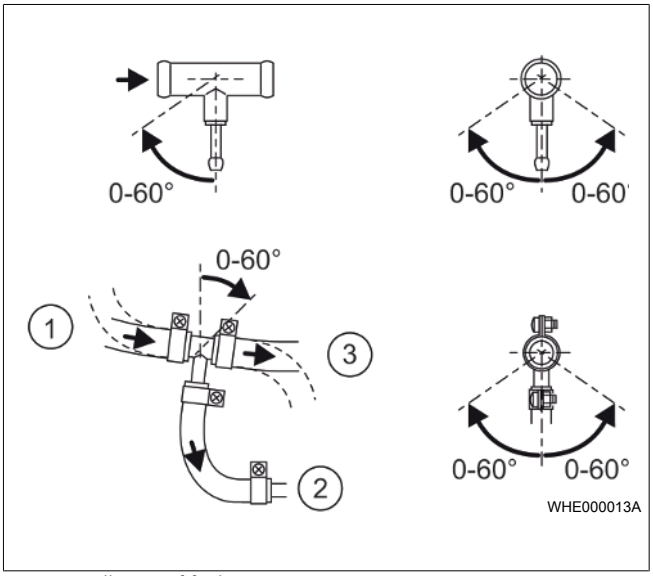


*Fig. 9 Installation of fuel extractor*

| | | | |
|---|---|---|---|
| ① | from fuel tank | ③ | to motor |
| ② | to fuel pump | | |

## 5.3 Taking off fuel from the vehicle tank

**DANGER**

**Risk of fire by fuel escaping from leaking fuel tank**

Skin burns.

- ▶ Do not drill into a plastic fuel tank.
- ▶ When retrofitting the fuel take-off system on a plastic tank: Install suitable tank extracting device only on the vehicle's fuel delivery unit.

### 5.3.1 Installing tank extracting device on vehicle fuel delivery unit

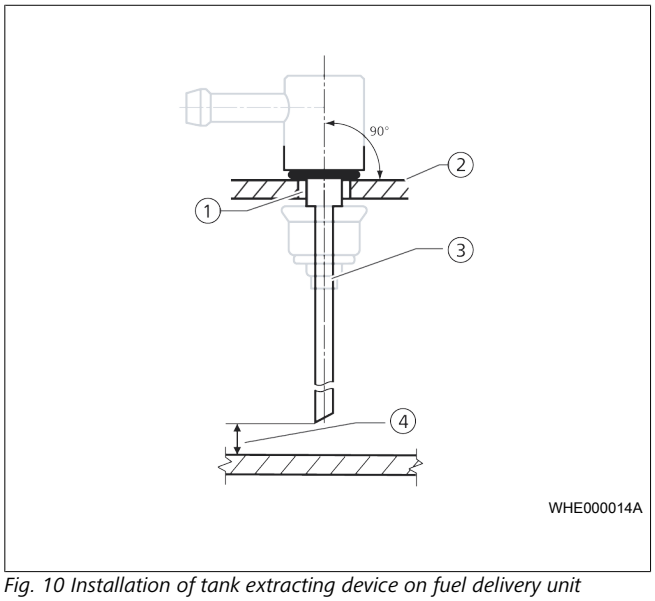


*Fig. 10 Installation of tank extracting device on fuel delivery unit*

| | | | |
|---|---|---|---|
| ① | Webasto tank extracting device | ③ | Standpipe of Webasto fuel extractor |
| ② | Section of fuel delivery unit with hole | ④ | Minimum distance of 10 mm between the standpipe and the base of the fuel tank |

✓ Make sure that the standpipe of the Webasto tank extracting device cannot impair operation of the vehicle's fuel delivery unit with fuel gauge in any operating mode.

✓ Make sure that the mounting surface for the Webasto tank extracting device is clean, level and free of burrs.

▶ In the installed position, maintain a minimum distance of 10 mm between the standpipe and the base of the fuel tank. Maintain a minimum distance of 20 mm above the base of the fuel delivery unit.

▶ Observe the safety measures specified by the vehicle manufacturer.

▶ Observe the tightening torque requirements specified by the vehicle manufacturer.

## 5.4 Taking off fuel from a separate fuel tank

✓ Do not install the fuel filler neck in the vehicle interior.

✓ Only use a fuel tank that can be closed off with a filler cap.

▶ Clearly mark the type of fuel to be used on the fuel filler neck.

## 5.5 Fuel line

**WARNING**
Make sure there are no leaks!

### 5.5.1 Fuel line requirements

**NOTE**
Use only plastic fuel lines made from light and temperature-resistant PA12/ETFE, PA12/EFEP, PA9T/PA12 in accordance with DIN 73378 or suitable steel lines.

✓ Use Webasto-approved fuel lines and genuine Webasto connectors.

### 5.5.2 Connecting fuel lines

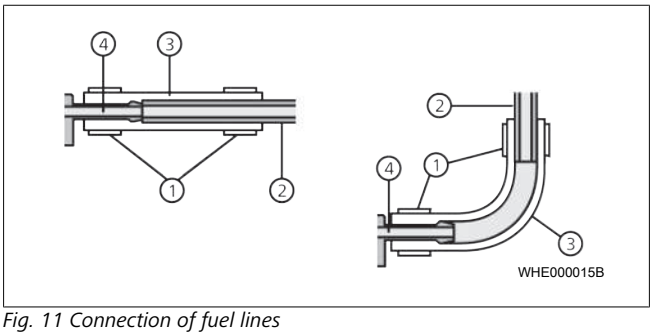


*Fig. 11 Connection of fuel lines*

| | | | |
|---|---|---|---|
| ① | Hose clip | ③ | Hose |
| ② | Fuel line | ④ | VDA connector |

▶ Make sure that the connections are tight.

### 5.5.3 Installing fuel line

**NOTE**
**Malfunctions during combustion caused by gas bubbles and high fuel temperatures.**
Gas bubbles caused by the heat from the engine and high fuel temperatures can cause malfunctions during operation.
▶ Install the fuel lines in cool areas.

▶ Keep line lengths as short as possible.

▶ Avoid sagging of the fuel line.

▶ Fasten fuel lines.

▶ Protect the fuel lines from damage:
- Install stone impact guard.
- Fit protectors on sharp edges.

▶ Protect fuel lines from high temperatures (e.g. from exhaust pipe):
- Install heat shield if necessary.
- Do not install fuel lines in areas where heat builds up.

▶ Make sure the fuel lines are not damaged.

## 5.6 Fuel pump

**NOTE**
Damage to the fuel pump.
▶ Lines should be filled under the control of the Webasto Thermo Test PC Diagnostics only.
▶ Do not operate the fuel pump using the vehicle voltage.

**NOTE**
Operating the heater with any other than the DP42 / 42.4 fuel pump will invalidate the warranty and type approval.
▶ The heater must only be operated using the fuel pump DP42 / 42.4.

### 5.6.1 Installation location requirements:

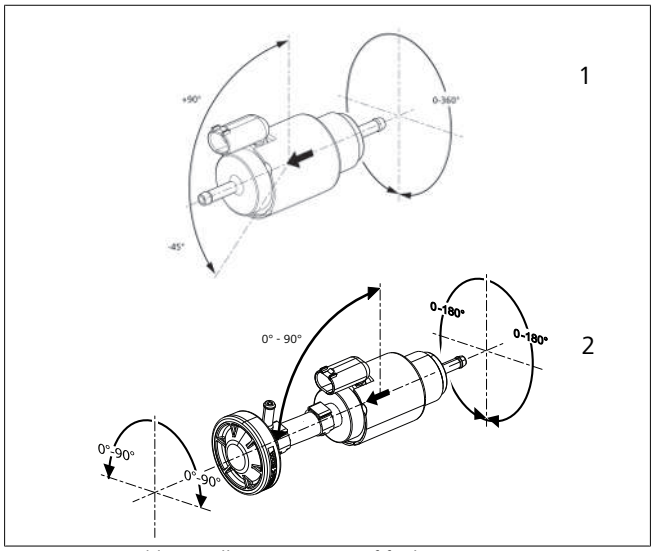


*Fig. 12 Permissible installation position of fuel pump*

| | Meaning |
|---|---|
| 1 | Fuel pump DP42.4 (installation position petrol) |
| 2 | Fuel pump DP42.4 (installation position diesel) |

The installation location must satisfy the following requirements:

- ✓ The installation location is close to the fuel tank in order to keep the intake fuel line as short as possible.
- ✓ The installation location is protected from stone impact.
- ✓ The installation location is protected from high temperatures.

### 5.6.2 Installing fuel pump

- ▶ Ensure the correct installation position (see Fig. 12).
- ▶ Pay attention to the direction of flow of the fuel. The end with the connector is always the outlet end.
- ▶ Secure the fuel pump to the vehicle using a vibration-damping mount (e.g. rubberised Webasto clip).
- ▶ Connect the fuel pump and the wiring harness.

## 5.7 Fuel filter

**NOTE**

- ▶ If use of poor-quality fuel is likely, a Webasto fuel filter must be installed.
- ▶ Enter fuel filter in the vehicle's service booklet.

### 5.7.1 Installing fuel filter

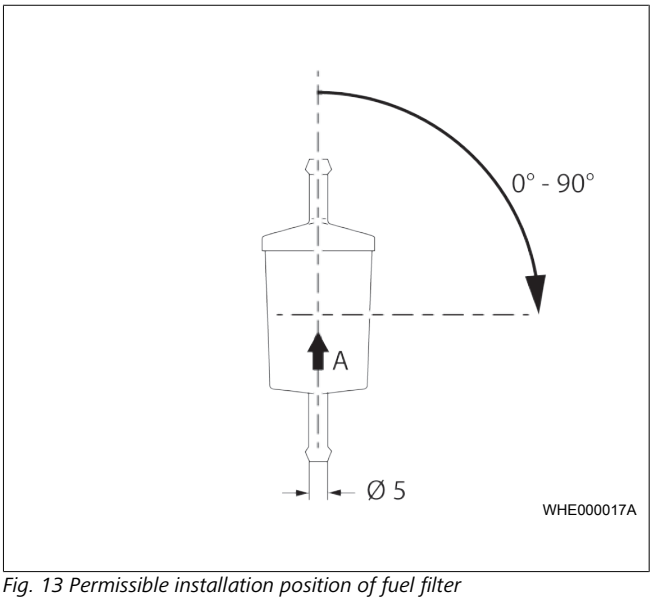


*Fig. 13 Permissible installation position of fuel filter*

- ▶ Ensure the correct installation position. Pay attention to the direction of flow of the fuel (arrow) in Fig. 13.

## 5.8 Fuel supply sticker

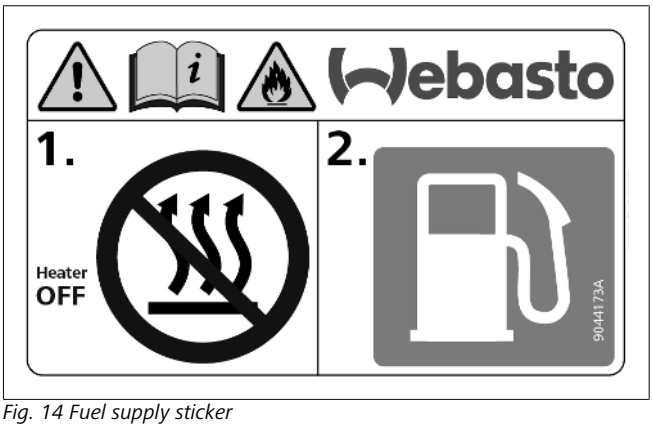


*Fig. 14 Fuel supply sticker*

- ▶ Affix the sticker "Switch Off Heater Before Refuelling" (included in scope of delivery) in area of fuel filler neck.

# 6 Combustion air system

## 6.1 Combustion air intake line

**DANGER**

Use only combustion air intake lines approved by the manufacturer. Damage caused by confusing the exhaust line with the combustion air intake line.

**NOTE**

During installation, make sure that any fuel pump cables in the vicinity are not damaged.

| Requirements of the combustion air intake line | Value |
|---|---|
| Max. length of combustion air intake without silencer | 5 m ** |
| Min. length with exhaust or / and combustion air intake silencer | 2.5 m ** |
| Recommended min. length with integrated combustion air intake silencer | 0.5 m |

| Requirements of the combustion air intake line | Value |
|---|---|
| Min. length with external combustion air intake silencer | * |
| Inside diameter | 22 mm |
| Smallest bend radius | 50 mm |
| Max. sum of all bends | 270° |

*Table 4: Limit values of combustion air intake line*

*: The external combustion air intake silencer can be connected directly to the heater. The combustion air intake line serves as a connection piece.

**: Maximum total length of combustion air intake line and exhaust line combined.

- ▶ Install combustion air intake line rising to the heater.
- ▶ If combustion air intake line cannot be installed continually rising:
- ● Make a condensation drain hole (Ø 2-4 mm) at the lowest point of the syphon.
- ● Make sure that no exhaust gasses are drawn in.

## 6.2 Notes on combustion air system

**DANGER**

**Unconsciousness and risk of suffocation**

Possible lack of oxygen. Reduced oxygen levels due to incorrectly positioned combustion air intake opening.

- ▶ Do not take combustion air from enclosed areas used by people.

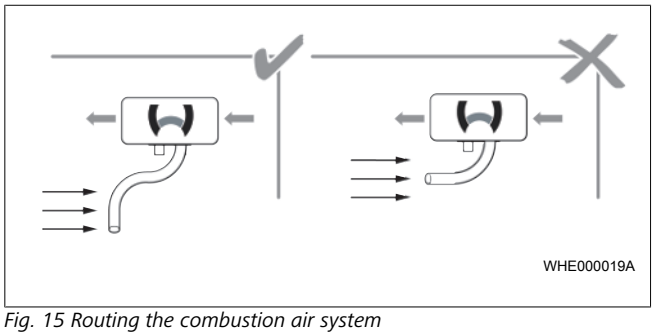


*Fig. 15 Routing the combustion air system*

- ✓ There is no pressure difference (positive or negative) between the exhaust gas outlet and the combustion air inlet.
- ✓ Combustion air is not taken from from enclosed areas used by people.
- ✓ The combustion air intake opening has the following requirements:
  - – It must be positioned in a cool place above the maximum permissible fording level of the vehicle, in a location protected from spray.
  - – It is not possible for it to become clogged with dirt.
  - – It is not possible for it to draw in exhaust gases.
  - – The combustion air intake opening does not face in the direction of travel.
  - – Through holes are made so as to be splash-proof.
- ▶ Fit a spray guard on the intake opening depending on the model.

## 6.3 External combustion air intake silencer (optional)

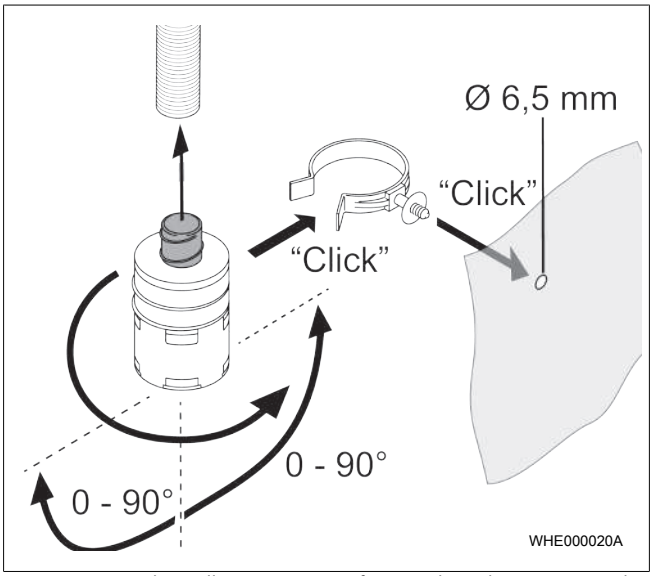


*Fig. 16 Permitted installation position of external combustion air intake silencers*

Installation of an external combustion air intake silencer is recommended.

Comply with installation position in Fig. 16.

# 7 Exhaust system

## 7.1 Notes on exhaust system

**DANGER**

**Danger of suffocation**

**Outcome: Poisoning and asphyxiation**

- ▶ Exhaust gas must be routed outside.
- ▶ Make sure that the exhaust gasses and exhaust lines are not routed through the interior.

**DANGER**

**Fire risk due to hot exhaust gasses**

**Outcome: Injuries or damage to property caused by fire**

- ▶ Do not direct the exhaust gas outlet towards highly flammable or heat-sensitive parts.

## 7.2 Exhaust pipe

- ✓ Avoid syphon (risk of condensation accumulation).

| Requirements of the exhaust line | Value |
|---|---|
| Inside diameter | 22 mm |
| Material | Non-corroding |
| Minimum length | 0.5 m |
| Maximum length | 5 m * |
| Maximum length with exhaust or / and combustion air intake silencer | 2.5 m * |
| Smallest bend radius | 50 mm |
| Max. sum of all bends | 270° |

*: Maximum total length of combustion air intake line and exhaust pipes combined.

- ▶ Do not secure the exhaust line to heat-sensitive parts.

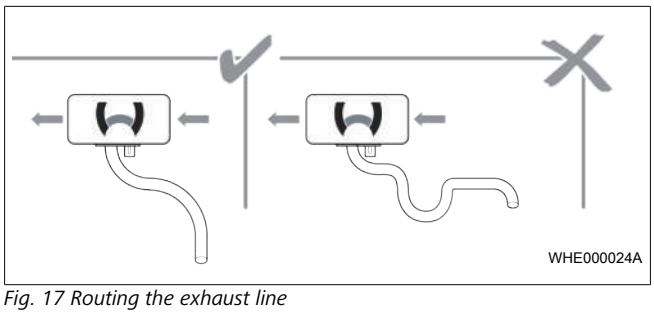


*Fig. 17 Routing the exhaust line*

- ▶ Install exhaust lines continually falling from heater (condensation can drain off).
- ▶ If exhaust line cannot be installed continually falling:
  - – Make a condensation drain hole (Ø 2-4 mm) at the lowest point of the syphon.
  - – Make sure that the condensation drain hole does not point towards parts that are sensitive to water or heat.
- ▶ Insulate exhaust line (use appropriate insulation) to prevent condensation.
- ▶ Maintain maximum length of exhaust line.

## 7.3 Exhaust silencer (optional)

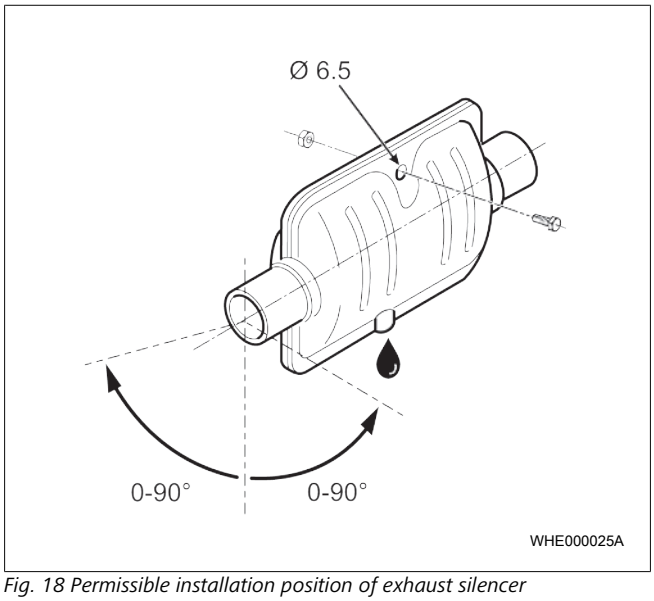


*Fig. 18 Permissible installation position of exhaust silencer*

- ✓ The installation location of the exhaust silencer (optional) is as close as possible to the heater.
- ✓ The exhaust silencer is not secured to heat-sensitive parts (e.g. brake lines, electrical cables).
- ▶ Ensure the correct installation position of the exhaust silencer (horizontal, +/- 90°).

See Fig. 18.

- ▶ Maintain adequate distance from heat-sensitive parts. A heat shield can be fitted.
- ▶ Install exhaust silencer such that condensation can drain off through the condensation drain hole in the exhaust silencer.

## 7.4 Exhaust gas outlet

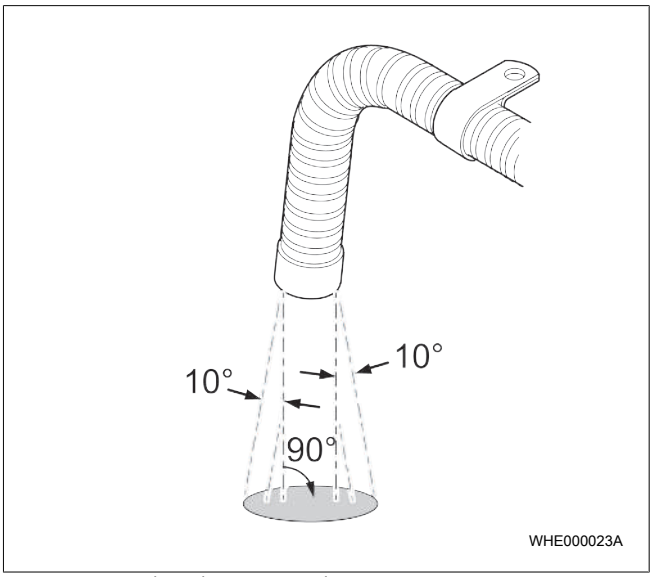


*Fig. 19 Routing the exhaust gas outlet*

- ✓ The exhaust gasses can flow out unhindered.
- ✓ The exhaust gas outlet must not be blocked.
- ✓ Exhaust gases must not emerge in the direction of travel.
- ✓ The exhaust gas outlet is not too close to the ground.
- ▶ The exhaust line must continue for at least 10 mm after passing through the underbody cover.
- ▶ Secure the exhaust line maximum 150 mm from the exhaust gas outlet so that the exhaust gasses emerge at an angle of 90° ±10° to the ground.

# 8 Electrical connection

**DANGER**

**Danger of fire and/or overheating caused by live parts.**

- ▶ The vehicle power supply must be disconnected when the heater is being installed or worked on.

**DANGER**

**Danger of fire and/or overheating caused by live parts**

- ▶ The electrical cable or wiring harness must be sufficiently dimensioned and insulated.
- ▶ All electrical circuits must be protected by fuses or automatic circuit breakers.
- ▶ The electrical cable or wiring harness must be firmly secured and routed such that the cable or wiring harness is adequately protected against mechanical and thermal stress.

**DANGER**

**Danger of explosion and suffocation**

For ADR vehicles: The heater must only be switched on manually via a switch. The heater must not be switched on automatically via a programmable switch.

**DANGER**

If no earth is present via Y2 or H5 at the auxiliary drive pin (see wiring diagram) on the control unit input on switch-on, all ADR functions are inoperative.

Observe additional requirements from the operating and installation instructions for the Air Top 2000 STC and the control element.

Select appropriate wiring diagram (dependent on application and Webasto control element).

## 8.1 Information on the electrical connection

- Insulate ends of lines that are not required.

## 8.2 Connecting heater

**NOTE**

After it is switched off the heater continues running. The power supply must not be disconnected before approx. 240 seconds have elapsed.

An electrical battery disconnector or relay can be connected in accordance with the wiring diagram.

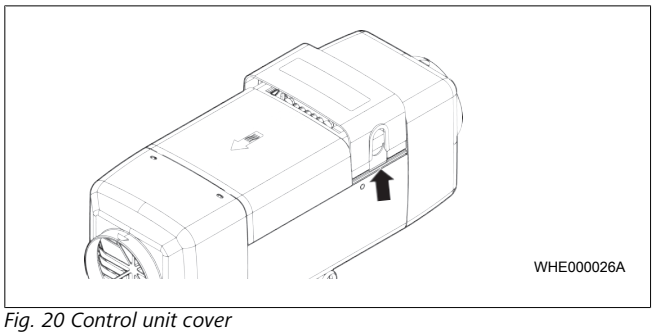


*Fig. 20 Control unit cover*

- Use a blunt blade on both sides to remove the control unit cover.
- Plug in wiring harness connector at control unit.
- Route cable through left or right cable lead-through.
- Position cable grommet such that the cable lead-through is sealed off in the control unit cover.
- Connect the supply voltage to the vehicle electrical system.
- Install fuse holder in vehicle interior.

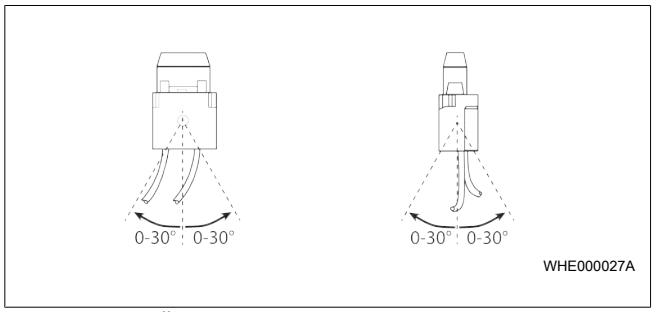


*Fig. 21 Fuse installation positions*

- Install a fuse (according to DIN 72581-3, F= 15 A for 24 V, F= 20 A for 12 V) with fuse holder as a safety measure for the heater.
- Connect heater corresponding to the wiring diagram.
- Replace control unit cover.
- Connect fuel pump cable to the heater's fuel pump.

## 8.3 Connecting control element

- Carry out assembly according to the control element installation instructions.
- Connect plug to control element according to the labelling on the heater wiring harness.

## 8.4 Connecting heater to ADR vehicles

According to the requirements in chapter 2.3.2, "ECE R122 Requirements" on page 5, the heater in ADR vehicles must continue running for a reduced time (40 s) in the event of a motor shutdown and/or activation of the auxiliary drive. This function is triggered by corresponding circuitry of the heater pins D+ and auxiliary drive.

Application example for vehicles with auxiliary drive (pin 3 (purple) is connected to auxiliary drive):

- Connect pin 4 (grey) to terminal D+/61. Continued running for ADR (40 s) is triggered by a change in potential from +12/24V to 0V (motor off).

or

- If a voltage of 12V/24V is applied to pin 3 (purple), continued running for ADR (40 s) is triggered (auxiliary drive on). The heater is locked while the voltage is applied to pin 3 (purple).

Application example for vehicles without auxiliary drive (pin 3 (purple) is connected to earth):

- Connect pin 4 (grey) to terminal D+/61. Continued running for ADR (40 s) is triggered by a change in potential from +12/24V to 0V (motor off).

✓ After connection in accordance with the ADR wiring diagram (see Wiring Diagram), the heater will continue running for 40 s when switch S5 is operated.

- Connect heater and control element as described in chapter 8.2, "Connecting heater" on page 16 and chapter 8.3, "Connecting control element" on page 16.

**DANGER**

ADR installations may be carried out by certified specialists only. The function should be checked on each vehicle.

## 8.5 Cable cross-sections and colours

Wires or components shown with dashed lines are optional and not included in the scope of delivery or in the wiring harness.

| Line length | < 7.5 m | 7.5 – 15 m |
|---|---|---|
| Cable cross-sections (Wiring diagram based on < 7.5 m) | 0.5 mm² | 1.0 mm² |
| | 1.0 mm² | 1.5 mm² |
| | 1.5 mm² | 2.5 mm² |
| | 2.5 mm² | 4.0 mm² |
| | 4.0 mm² | 6.0 mm² |

| Colour | Abbreviation | Colour | Abbreviation |
|---|---|---|---|
| blue | bl | orange | or |
| brown | br | red | rt |
| yellow | ge | black | sw |
| green | gn | violet | vi |
| grey | gr | white | ws |

## 8.6 Legend to wiring diagram

| No. | Description | Remarks |
|---|---|---|
| A1 | Heater | Air Top 2000 STC |
| A2 | Control unit | Control unit 1574 |
| B1 | Flame monitor | Only for petrol heaters |
| B2 | Temperature sensor | Inside |

| No. | Description | Remarks |
|---|---|---|
| B3 | Overheat sensor | Overheating protection |
| B4 | Room temperature sensor | External (optional) |
| E | Glow plug | – |
| F1 | Fuse: 24 V = 15 A, 12 V = 20 A | Blade fuse DIN 72581-3 |
| F2 | Fuse 1A | Blade fuse DIN 72581-3 |
| H6 | LED (green, blue, white, red) | Operation indicator, Ready indicator, ON indicator, fault list |
| H7 | Symbol on display | – |
| M1 | Drive motor | Heating and combustion air fan |
| P | SmartControl / MultiControl / W-Bus control element | W-bus |
| R1 | Resistor | Only for internal temperature sensor |
| S3 | Switch | $CO_2$ setting |
| X1 – X6 | Plug connection | To Item A2 |
| X9 | 4-pin plug connection | - |
| X9 (a) | 4-pin plug connection | Analogue, setpoint sensor connection |
| X9 (c) | 4-pin plug connection | W-Bus, W-Bus control element connection |
| X10 | 4-pin plug connection | To Item P1 or P2 |
| X11 | 2-pin plug connection | To Item B4 (optional) |
| X13 | 2-pin plug connection | To Item Y1 |
| X15 | 1-pin plug connection | To Item S3 |
| X16 | 2-pin plug connection | Wiring harness connection DP42.4 |
| X17 | 2-pin plug connection | Wiring harness connection DP42.4 |
| Y1 | Fuel pump | DP42.4 |
| ① | Positive from terminal 15/75 to connection 10: Continuous heating mode is possible in connection with quick heating function provided the ignition is switched on. | |
| ② | All heater versions: connection of W-bus diagnostics, SmartControl, MultiControl, UniControl or ThermoConnect2. | |
| ③ | $CO_2$ settings: see workshop manual | |
| ④ | Connection to terminal 30: Continuous heating mode is possible with ignition switched off. | |
| ⑤ | Grey and violet wires required for ADR function. Non-ADR vehicles: Insulate and tie back ends of wires. | |
| ⑥ | External room temperature sensor (optional) | |
| ⑦ | Fuse (not included in wiring harness) | |
| ⑧ | Input, Ventilate (only for operation with control element without W-bus) | |
| ⑩ | Wiring harness adapter (optional) | |
| ⑪ | Switching capacity 500 mA | |

## 8.7 Pin assignments plug connection X6

| No. | Description |
|---|---|
| 1 | Power supply + (terminal 30) |
| 2 | Power supply – (terminal 31) |
| 3 | Auxiliary drive |
| 4 | Terminal D+ |
| 5 | W-bus (Webasto Thermo Test Diagnosis connection) |
| 6 | K-bus |
| 7 | $CO_2$ setting |
| 8 | External temperature sensor |
| 9 | External temperature sensor |
| 10 | Setpoint sensor + |
| 11 | Setpoint sensor - |
| 12 | Input, switch-on signal (ON/OFF) |
| 13 | Power supply, control element / error code output |
| 14 | Output, vehicle fan relay/output, battery disconnector afterrunning signal |
| 15 | Output, battery disconnector afterrunning signal/output, vehicle fan relay |
| 16 | Input, Ventilate (only for operation with control element without W-bus) |
| 17 | Not used |
| 18 | Not used |

## 8.8 Wiring Diagram

| No. | Configuration | Wiring Diagram |
|---|---|---|
| 1 | 12 V / 24  V with MultiControl (see Fig. 22) | 9038915A |
| 2 | 12 V / 24 V with rotary switch and vehicle blower (see Fig. 23) | 9032487A |
| 3 | 12 V / 24 V ADR operation with rotary switch (see Fig. 24) | 9032488A |
| 4 | 12 V / 24 V ADR operation with SmartControl (see Fig. 25) | 9032489A |
| 5 | 12 V / 24 V with UniControl / battery disconnector (see Fig. 26) | 9036920A |

*Table 5: Wiring diagram overview*

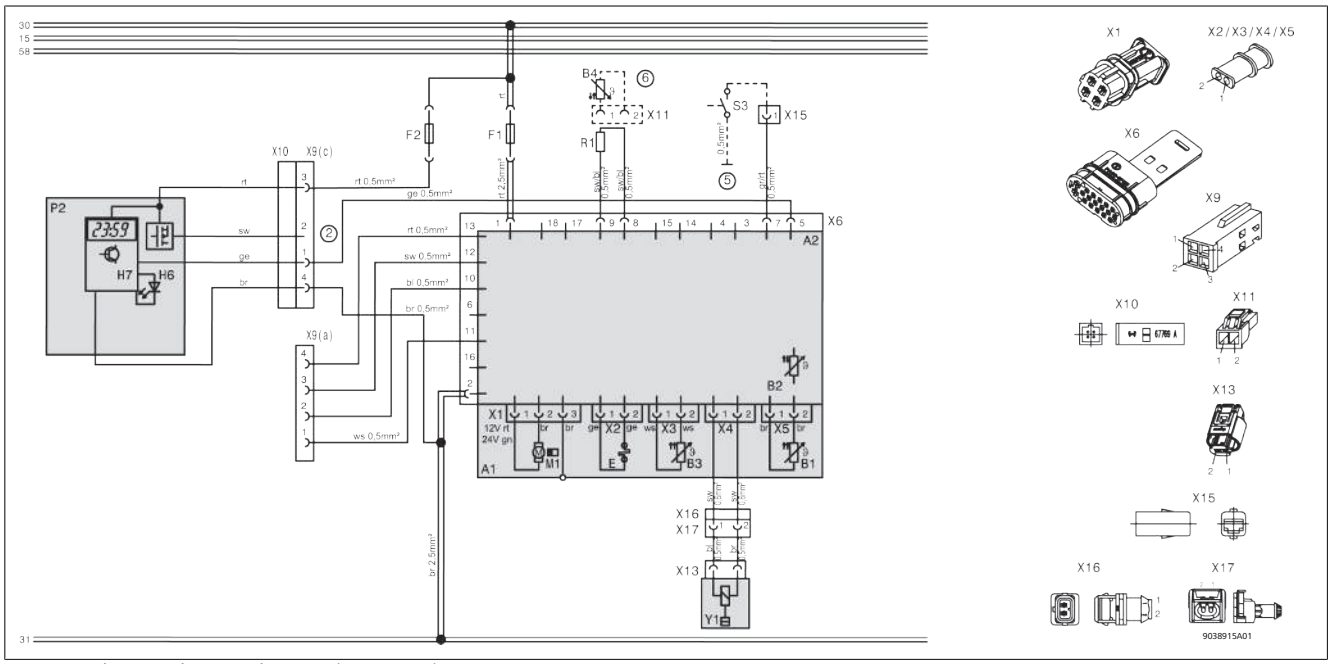


*Fig. 22 MultiControl wiring diagram (9038915A)*

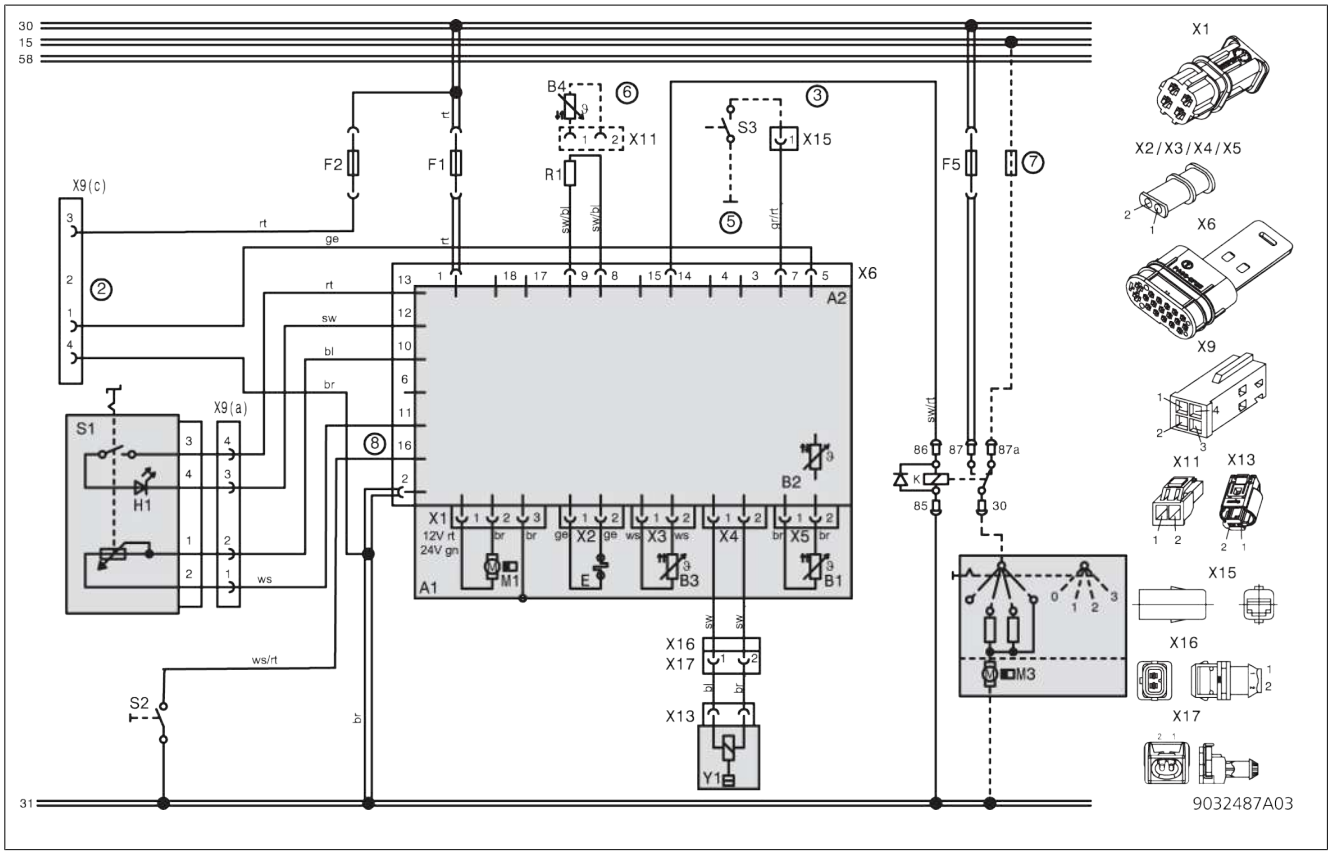


*Fig. 23 Wiring diagram for rotary switch (9032487A)*

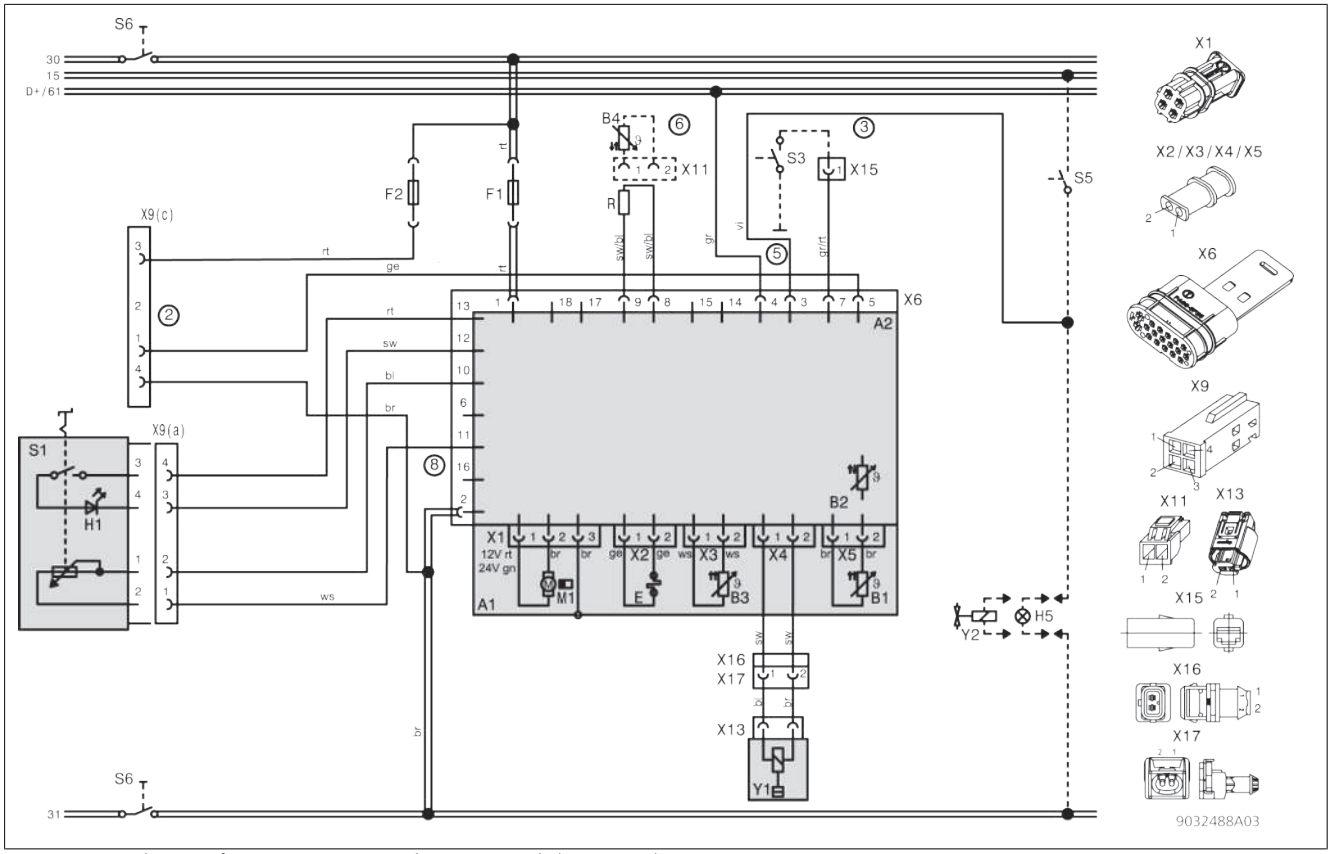


*Fig. 24 Wiring diagram for ADR operation with rotary switch (9032488A)*

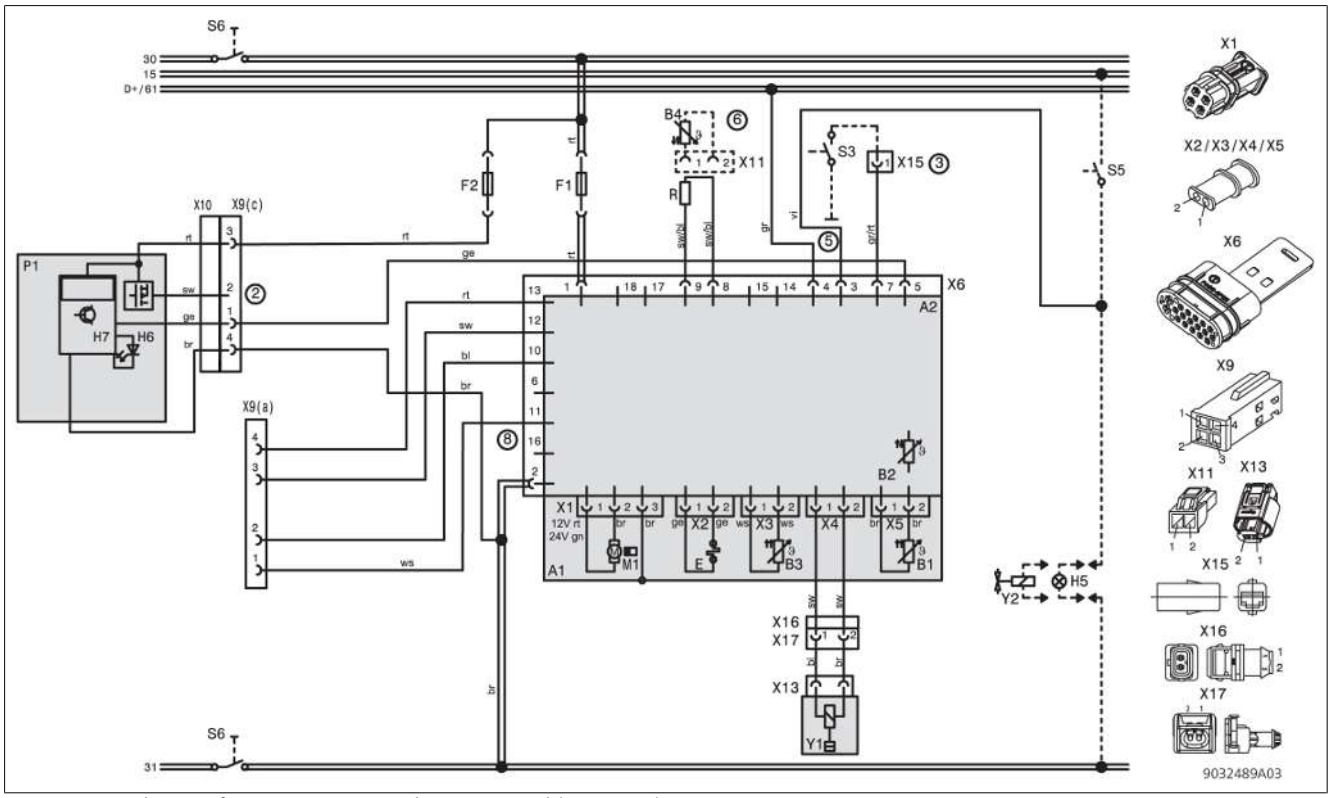


*Fig. 25 Wiring diagram for ADR operation with SmartControl (9032489A)*

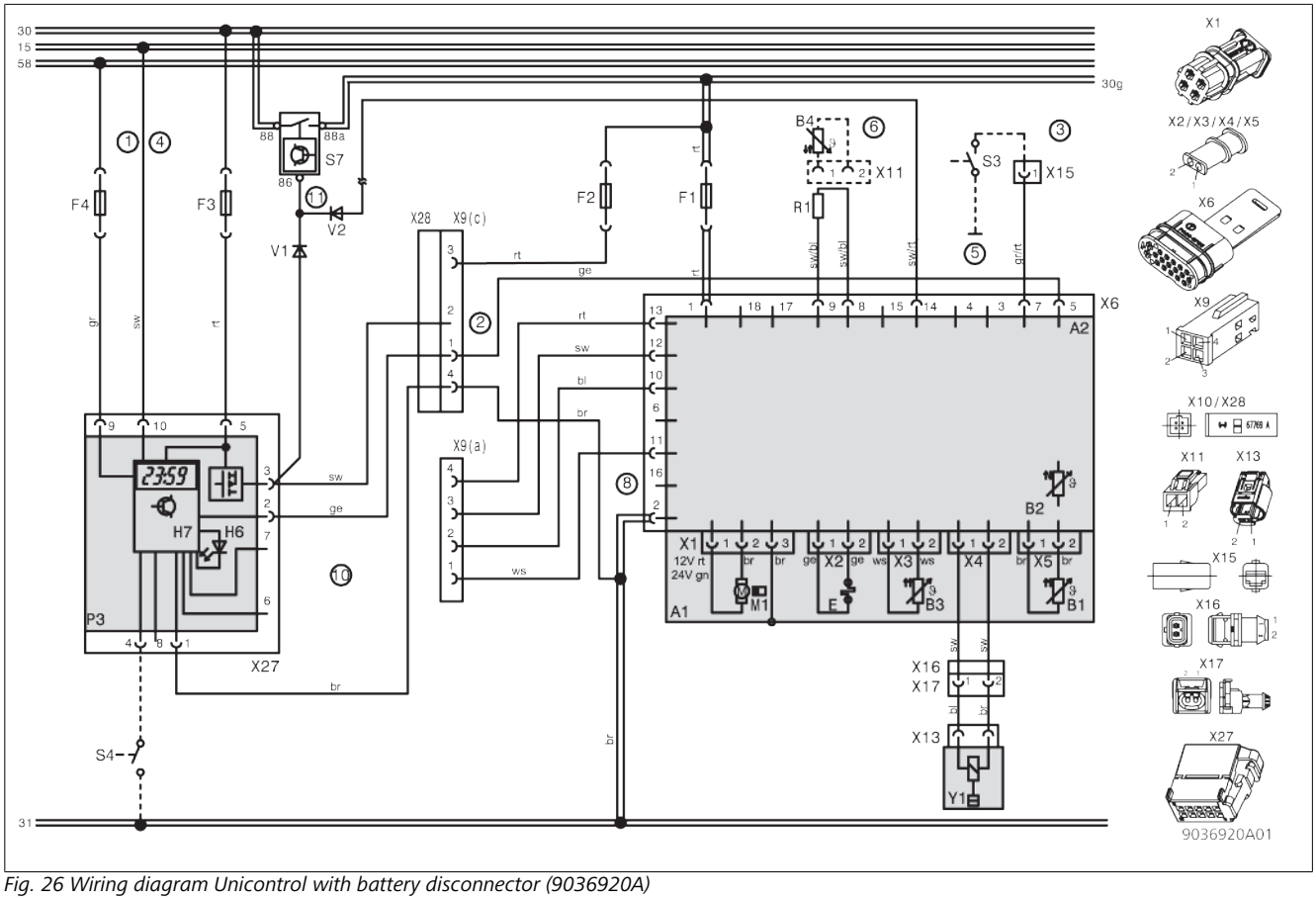


*Fig. 26 Wiring diagram Unicontrol with battery disconnector (9036920A)*

# 9 Initial start-up

✓ Heater is fully installed.

- ▶ Make sure the control unit cover is fitted in position.
- ▶ Bleed the fuel supply system using the Webasto Thermo Test PC Diagnostics.
- ▶ Switch on the heater via the control element (see control element operating instructions).

## 9.1 Product registration

- ▶ Register the product on the internet at: http://dealers.webasto.com
- ▶ Hand over the registration document to the next owner or user of the unit.

## 9.2 Checking operation with Webasto Thermo Test PC Diagnosis

Correct operation of the heater can be checked with the Webasto Thermo Test PC Diagnosis.

- ▶ Check heater in stable operation for approx. 15 minutes with the diagnosis monitoring function.
- ▶ Check the $CO_2$ value and adjust if necessary, as set out in chapter 6.3 of the workshop manual.

# 10 Drilling template for heater Air Top 2000 STC

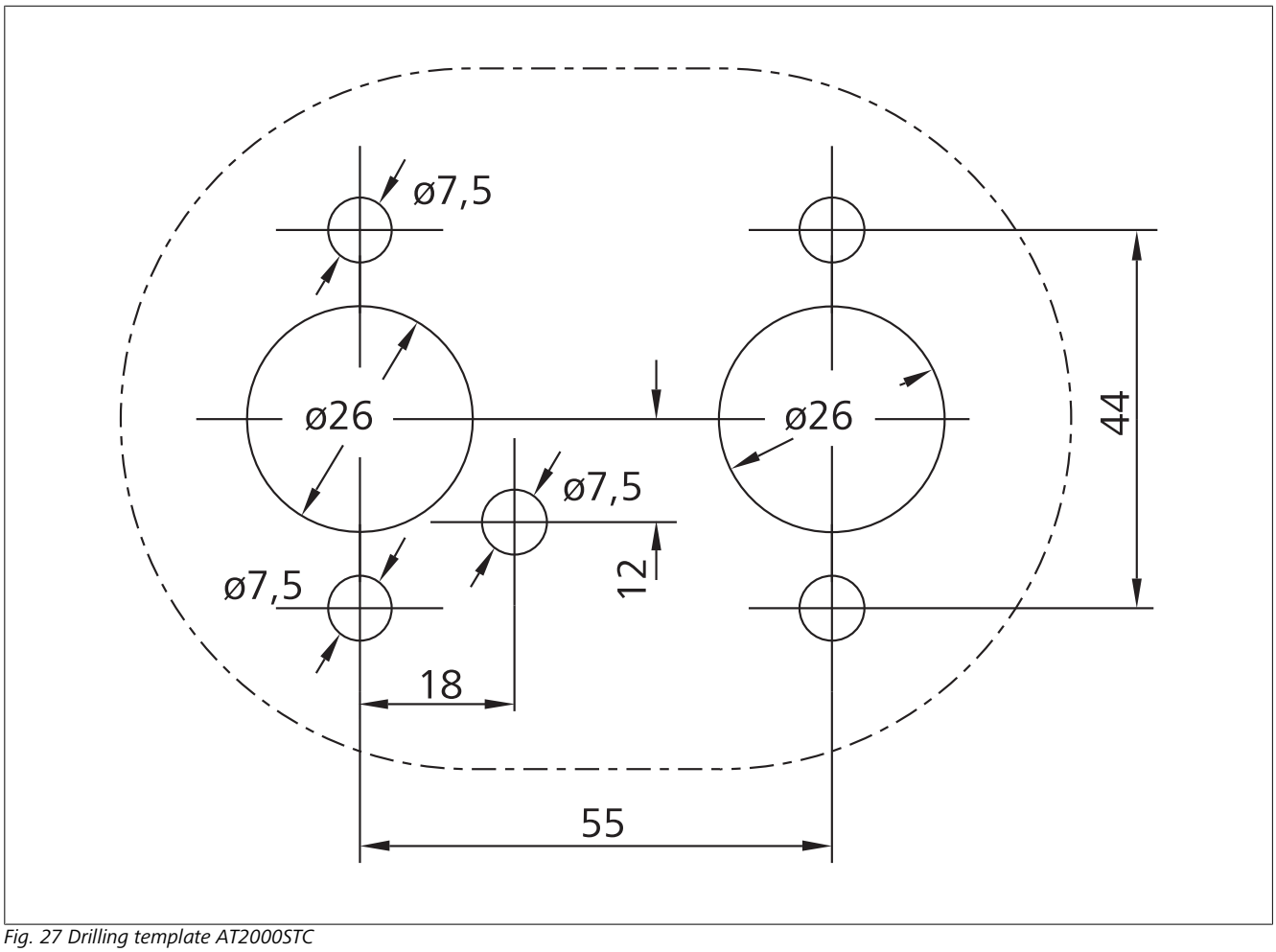


*Fig. 27 Drilling template AT2000STC*

# 11 Technical data

**NOTE**
The technical data apply under the following conditions: ambient temperature: +20°C, geodetic height: 0 m above sea level, rated voltage. The standard tolerances of ±10% for heaters shall apply if no limits are specified.

| Heater | Air Top 2000 STC B | Air Top 2000 STC D |
|---|---|---|
| Type approval: EMC | E1 R10- 06 1085 | |
| Type approval: Heating | E1 R122- 00 0216 | |
| Design | Air heater with evaporator burner | |
| Heat flow over control range [kW] | 1.0 - 2.0 | 0.9 - 2.0 |
| Fuel | Petrol DIN EN 228 | Diesel DIN EN 590<br>biodiesel DIN EN 14214<br>HVO DIN EN 15940 |
| Fuel consumption over control range [kg/h] (l/h) | 0.1 - 0.2<br>(0.14 - 0.27) | 0.1 - 0.21<br>(0.12 - 0.24) |
| Rated voltage [V] | 12 | 12 / 24 |
| Operating voltage range [V] | 10.5 - 16 | 10.5 - 16 / 20.5 - 31 |
| Rated power consumption over control range [W] | 15 - 30 | 15 – 30 / 13 - 28 |
| Permissible ambient temperature: | | |
| Heater (operation / storage) [°C] | –40 - +40<br>–40 - +85 | |
| Fuel pump (operation / storage) [°C] | –40 - +20 / 30 (petrol / diesel)<br>–40 - +85 | |
| Control unit (operation / storage) [°C] | -40 - + 75<br>-40 - + 85 | |
| Permissible combustion air intake temperature [°C] | –40 - +20 | |
| Adjustment range for interior temperature [°C] | +5 - +35 | |
| Maximum pressure loss in hot air system [hPa] | 1.5 | |
| Volumetric flow of hot air at fan speed around 0.5 hPa [m3/h] / [rpm] | max. 93 / 4750 | |
| $CO_2$ in exhaust gas (permitted function range) 1 kW / 2 kW [%] | 5.0 - 8.0<br>9.0 - 12.5 | |
| Length / Width / Height [mm] | 311 ± 2 / 118 ± 1 / 120 ± 1 | |
| Heater weight [kg] | 2.6 | |
| IP class: Heater | IP5K4K | |
| IP Protection class: Fuel pump | IPX6 / IPX7 / IP6K9K | |

To request this documentation in another language, please locate and contact your local Webasto dealer. You can find your nearest dealer at: https://dealerlocator.webasto.com/en-int.
To provide feedback (in English or German), please email: feedback2tdt@webasto.com

Ident No. 9043156C • 01/2024 • Errors and omissions excepted • © Webasto Thermo & Comfort SE

Europe, Asia Pacific:

Webasto Thermo & Comfort SE
Postfach 1410
82199 Gilching
Germany

Company address:
Friedrichshafener Str. 9
82205 Gilching
Germany

Technical website: https://dealers.webasto.com

Only within Germany
Tel: 0395 5592 444
Mail: technikcenter@webasto.com

UK only:

Webasto Thermo & Comfort UK Ltd
Webasto House
White Rose Way
Doncaster Carr
South Yorkshire
DN4 5JH
United Kingdom

9043156C

**www.webasto.com**